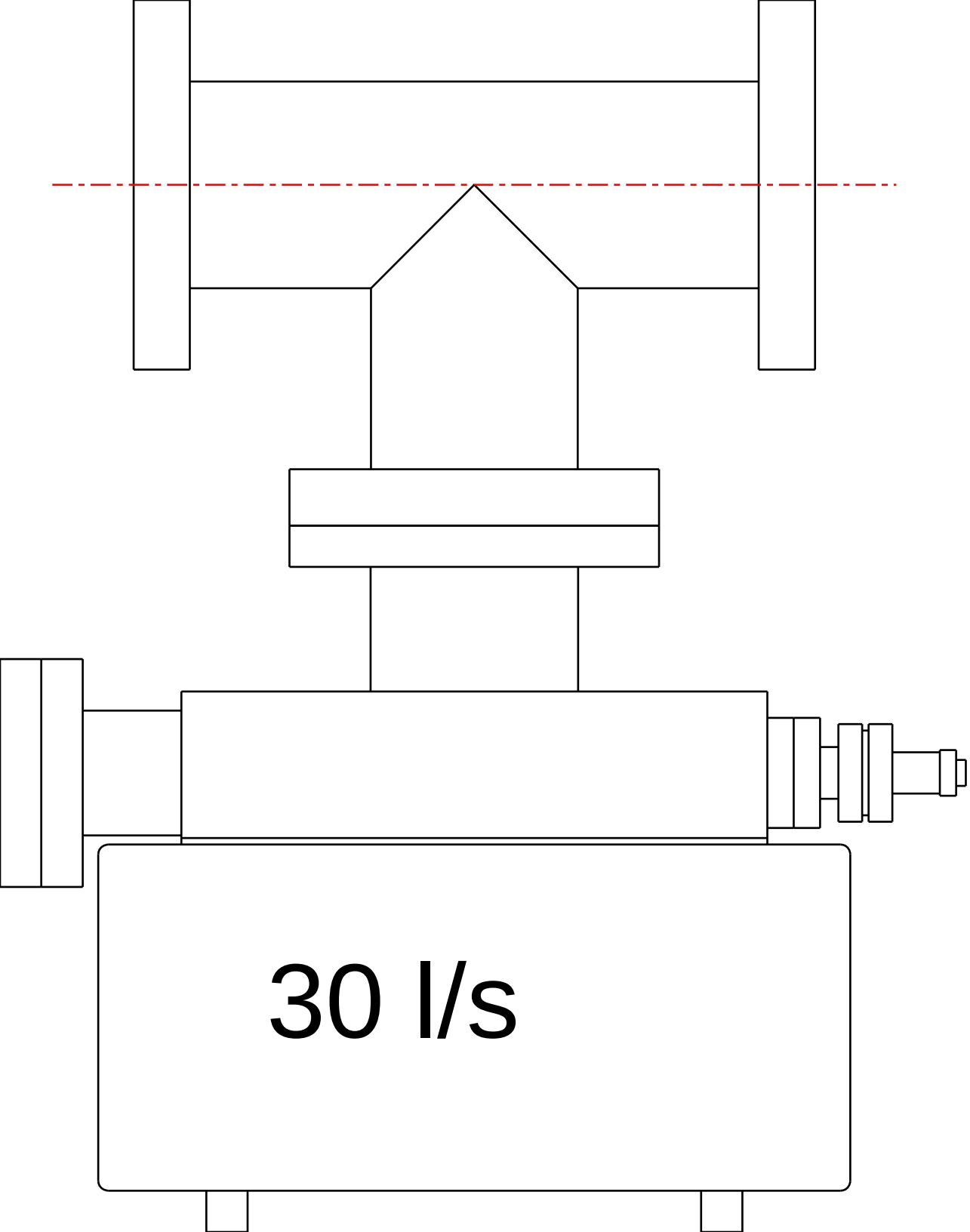
30 l/s