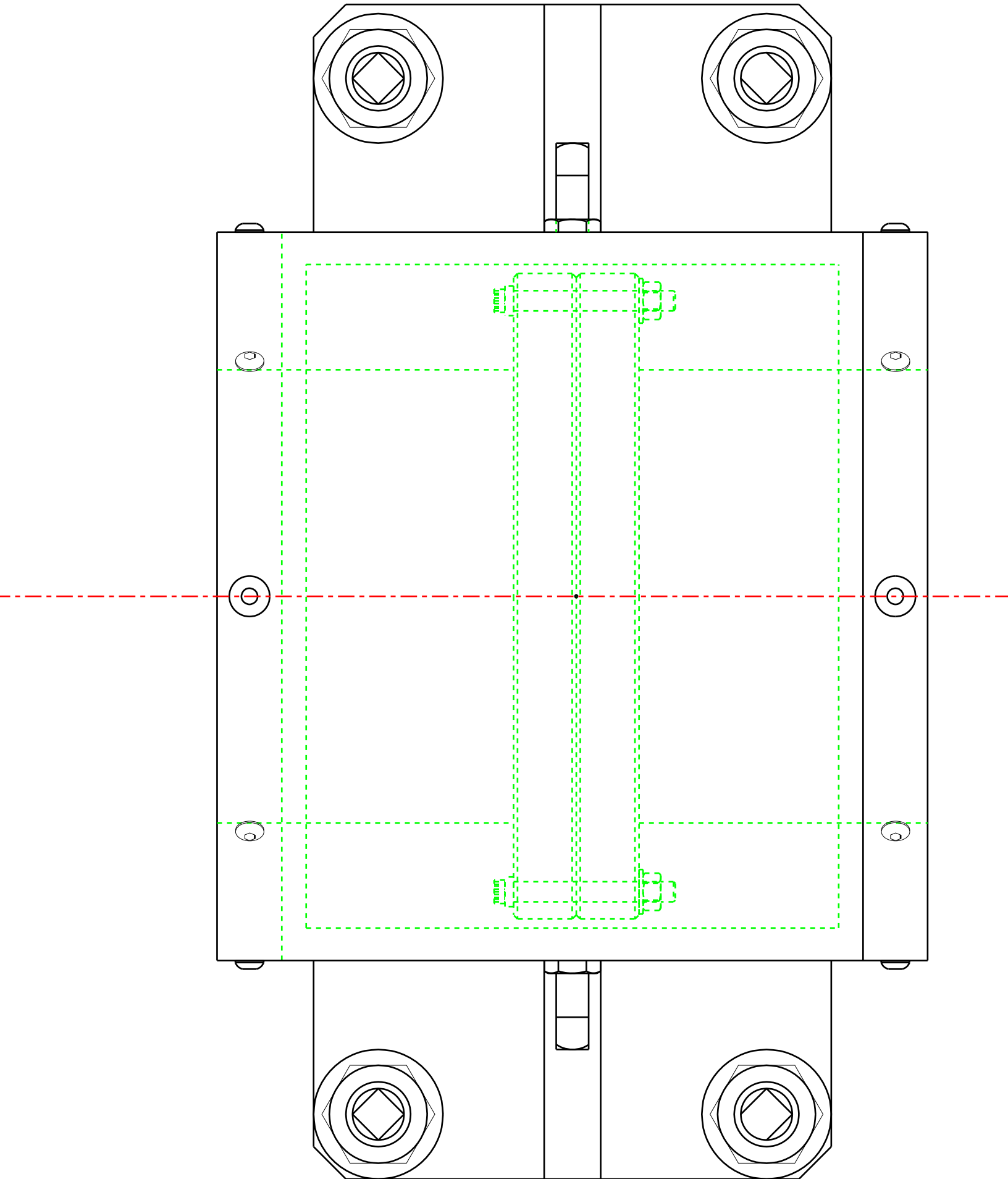
7mm
7mm