(E)	PLOT SCALE: .5=1	DWG. SCALE: 2	A11617

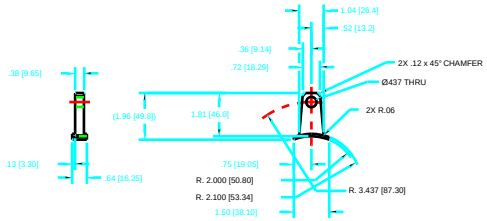

DETAIL A

ROTATED 45°

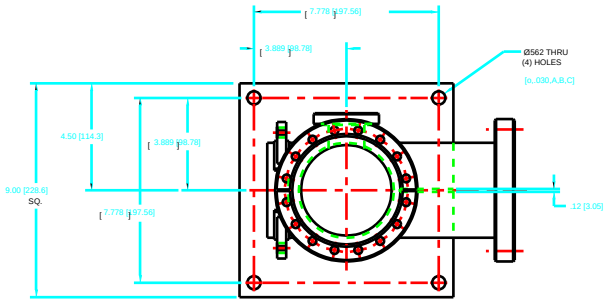

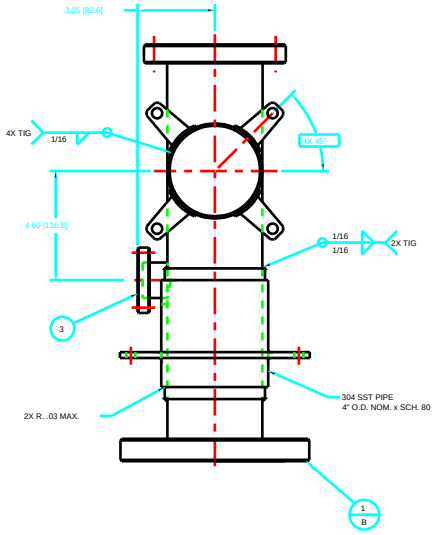

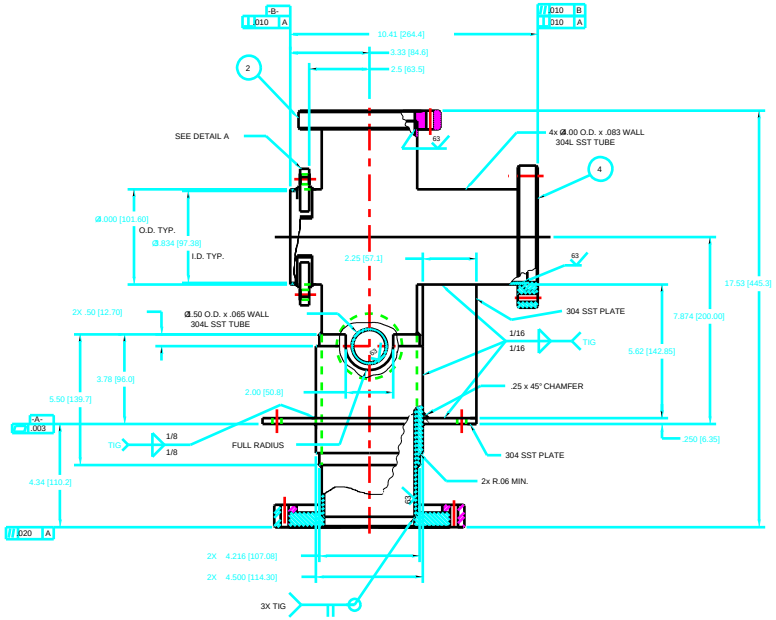

NOTES:

1. WHEN MACHINING VACUUM PARTS, USE OF SILICONE AND SULPHUR-BASED CUTTING FLUIDS IS PROHIBITED, USE ONE OF THE FOLLOWING:
   A) CIMCOLL 5 STAR 49
   B) TRIM SOL
2. THIS IS A UHV ASSEMBLY, ELECTROPOLISHING IS NEEDED BEFORE WELDING. PRIOR TO ELECTROPOLISHING, THE PART NEEDS TO GO THROUGH A MULTIPLE STEP CLEANING PROCESS INVOLVING DEGREASING, WASHING AND DRY NITROGEN BLOW DOWN.
3. ASSEMBLY SHALL BE LEAK TESTED USING A MASS SPECTROMETER WITH MINIMUM SENSITIVITY FOR HELIUM OF 2 X 10 -10 STANDARD CC/SEC PER LEAK METER DIVISION, SUCH AS
   ALCATEL SAM-110TCL
   Du PONT CEC 24-120B
   VARIAN MS-9, MS-90 OR MS-18

   CALIBRATION OF THE LEAK DETECTOR SENSITIVITY SHALL BE PERFORMED JUST PRIOR TO TRESTING.

   FINAL TEST WILL CONSIST OF SURROUNDING THE ASSEMBLY (BAGGING) WITH HELIUM. THE ASSEMBLY WILL BE REJECTED IF A 2% DEFLECTION ON THE MOST SENSITIVE RANGE OF THE LEAK DETECTOR IS SENSED WITHIN 1 MIN.
4. KEEP THE PART CLEAN, AND WRAP FOR UHV PACKING WITH ALUMINUM FOIL.
5. DIMENSIONS IN [ ] ARE MILLIMETERS
6. MACHINE 63 FINISH FOR ALL VACUUM SURFACE BEFORE ELECTRO-POLISHING.

4		6" O.D. VACUUM FLANGE MDC'S CAT. #100026	304 SST	1
3		2-3/4" O.D. VAC. FLANGE MDC'S CAT.#110014	304 SST	1
2		6" O.D. VACUUM FLANGE MDC'S CAT. #110026	304 SST	1
1	P4105090703-830101	8" O.D. LOWER FLANGE	304 SST	1
QTY	PART NUMBER	DESCRIPTION	MATERIAL / SPEC	QTY

PARTS LIST

A11617

ARGONNE NATIONAL LABORATORY

DRAWN BY MUSCIA	6/8/93	D.SHU	8/31/93
CHECKED BY J.CHANG	8/31/93	T.M.KUZAY	8/31/93
MUSCIA	8/31/93		
J.CHANG	8/31/93		

ADVANCED PHOTON SOURCE

V3 APS I.D FRONT END
SLOW VALVE & FAST VALVE
VACUUM CHAMBER WELDMENT
SUB-ASSEMBLY

304 STAINLESS STEEL

SCALE HALF SHEET 1 OF 1

E

P4105090703-830100-00