(E) PLOT SCALE: 1=4 DWG. SCALE: 4

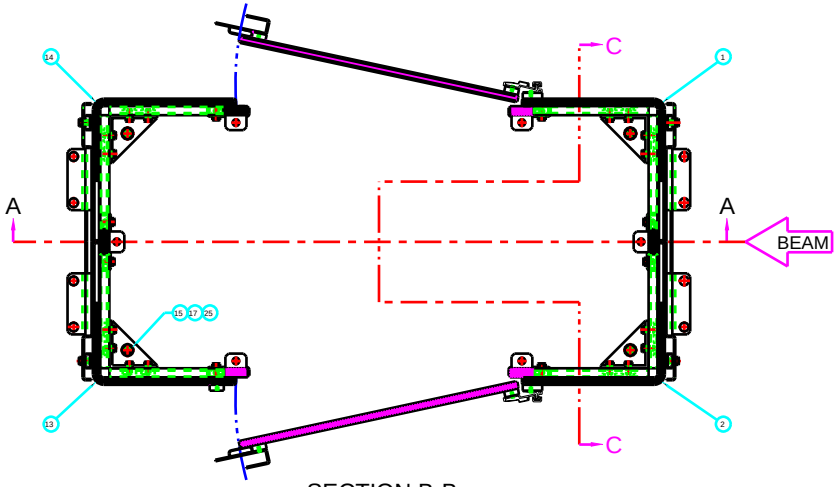

SECTION B-B

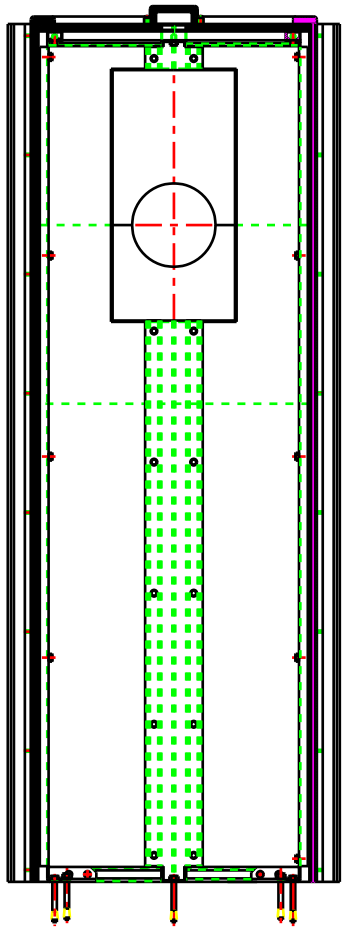

SECTION C-C

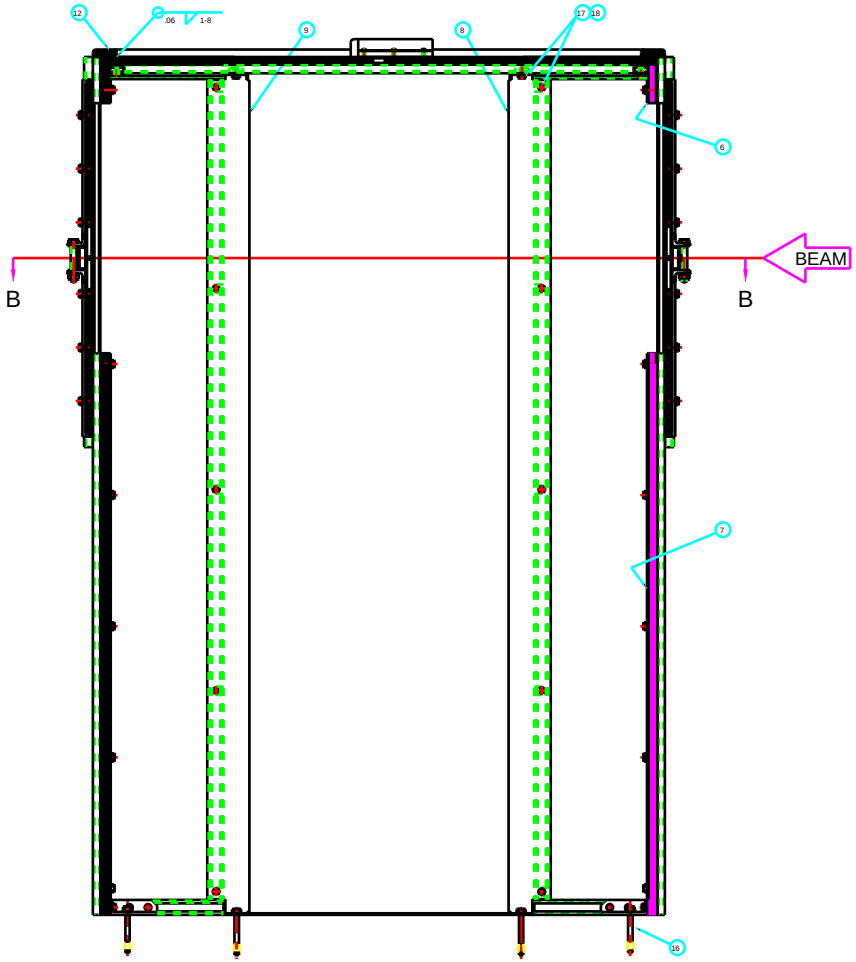

SECTION A-A

A2224900		ARGONNE NATIONAL LABORATORY	
corcuera	5/10/99	ADVANCED PHOTON SOURCE	
SANCHEZ/CORCUERA	5/10/99	U6 BM SHIELDED CABINET DIAGNOSTICS ASSEMBLY (7" ENTRY PANELS)	
SECTIONS		1:4	E P4105090606-700000-00