(E) PLOT SCALE: 1/8=1 | DWG. SCALE: 1

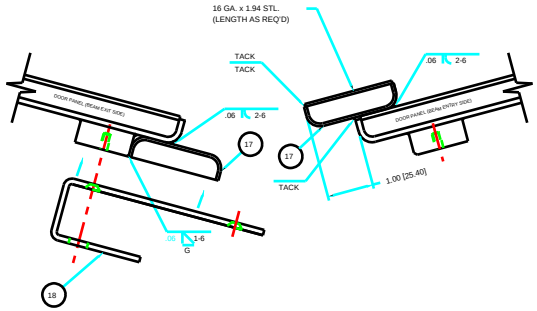

DETAIL B
FULL SCALE

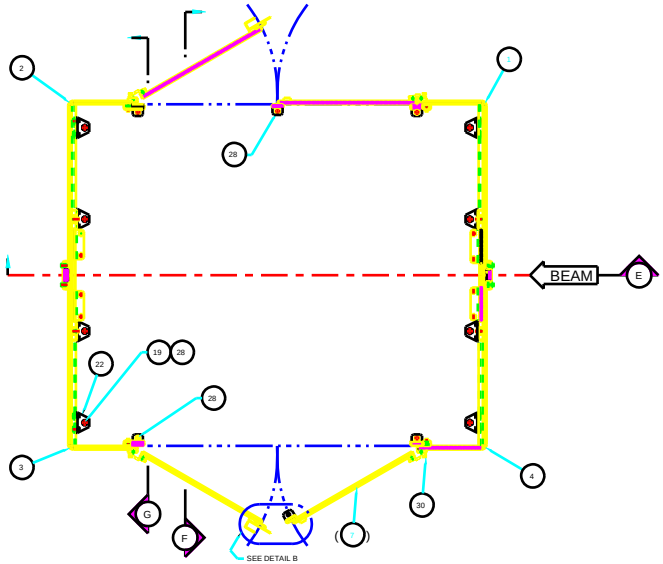

D SECTION

NOTES:

1. LEAD PANELS SHALL BE CONSTRUCTED FROM SINGLE UNPIERCED SHEET. FREE OF OXIDE INCLUSIONS, FISSURES, VOIDS AND ALL OTHER DETRIMENTAL DEFECTS. MATERIAL SHALL BE LEAD GRADE "C" TO COMPLY WITH FEDERAL SPECIFICATION-QQL201. CABINET SHALL MEET ALL APPLICABLE FEDERAL, STATE AND LOCAL RADIATION GUIDE LINES: NBS HANDBOOK 111 AND 114, ANS N43.2 AND DOE ORDER 5480.11.
2. PAINT EXPOSED LEAD SURFACES PER SPEC. (EXCEPT AS NOTED)
3. DIMENSIONS IN BRACKETS [ ] ARE MILLIMETERS AND ARE FOR REFERENCE ONLY.
4. SOME HIDDEN LINES MAY BE OMITTED FOR CLARITY.

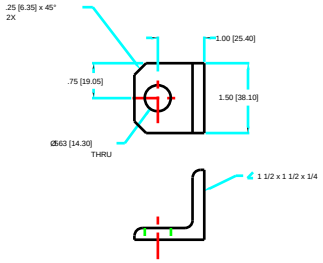

DETAIL C
(6 REQ'D)
FULL SCALE

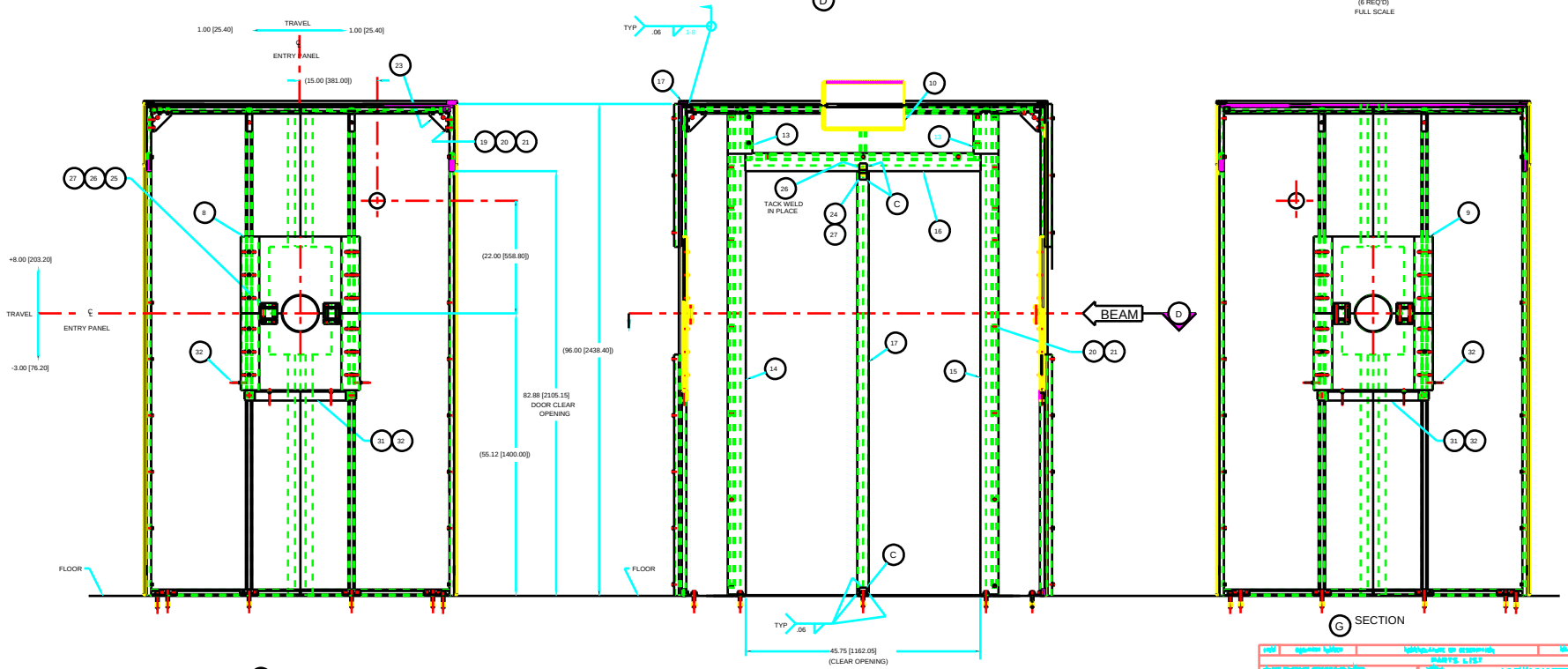

F SECTION
(ROOF LABYRINTH OMITTED FOR CLARITY)

E SECTION

G SECTION

01	AS PER REV. OF ENTRY/EXIT COVERS	AC	JC		

PARTS LIST

A22912C1

ARGONNE NATIONAL LABORATORY
ADVANCED PHOTON SOURCE

U6 BM SHIELDED CABINET
L4 & P8 SHUTTER & SLITS
ASSEMBLY

corcuera	6/28/95	D. SHU	7/13/95
T. SANCHEZ	7/8/95	T. KUZAY	7/14/95
SANCHEZ/CORCUERA	6/28/95		
T. SANCHEZ	7/8/95		

SECTIONS

1/8=1 | SHEET 3/3 | E | P4105090606-300000-01