(D)	PLOT SCALE: 1=1	DWG. SCALE: 1	

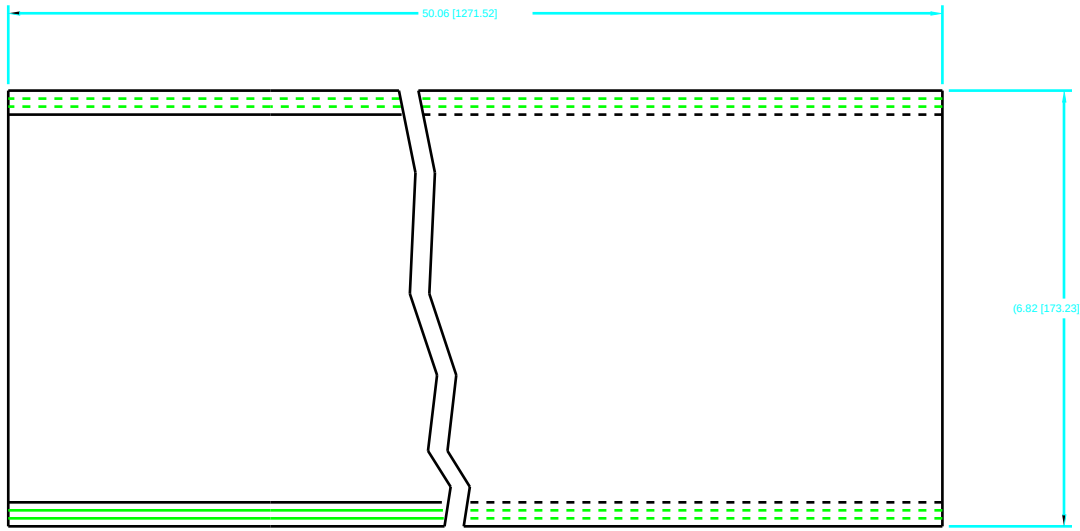

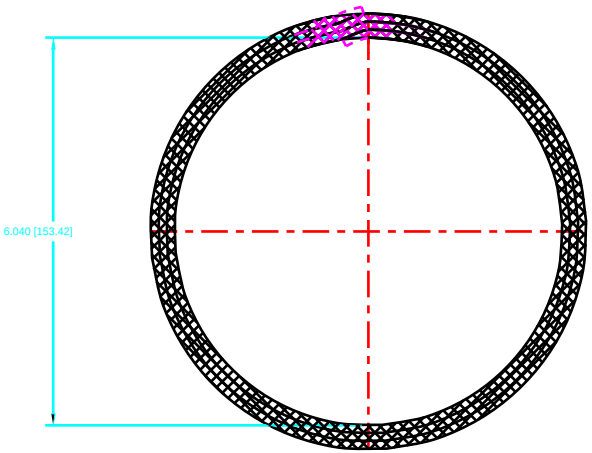

NOTES:

1. MATERIAL: LEAD SHEET 1/8" THK, GRADE 'C'
2. LEAD COIL MUST BE FORMED FROM A SINGLE SHEET, UNPIERCED, FREE OF OXIDE INCLUSIONS, FISSURES AND VOIDS.
3. BOND LEAD SHEET BEFORE WRAPPING.
4. BONDING EPOXY MUST WITHSTAND TEMPERATURES OF 170 °C REQUIRED FOR BAKE-OUT
5. DIMENSIONS IN [ ] ARE MILLIMETERS
6. EXTRUDED LEAD TUBE USED AS OPTION.

SYM	CHANGE DESCRIPTION	BY	CHKD	DATE

REVISIONS

ITEM	DWG/PART NUMBER	NOMENCLATURE OR DESCRIPTION	MATERIAL / SPEC	QTY

PARTS LIST

UNLESS OTHERWISE SPECIFIED: ALL DIMENSIONS ARE IN INCHES

TOLERANCES

DECIMALS: .X ± .1 [2.540]; .XX ± .03 [0.762]; .XXX ± .005 [0.127]

ANGULAR ± .25

SURFACE ROUGHNESS 125

REMOVE ALL BURRS AND BREAK SHARP EDGES .03 MAX.

SURFACE TEXTURE TO BE IN ACCORDANCE WITH LATEST ANSI B46.1

DIMENSIONING & TOLERANCING IN ACCORDANCE WITH LATEST ANSI Y14.5

DO NOT SCALE DRAWING

LOG NUMBER A2422900

THIS DRAWING IS THE PROPERTY OF ARGONNE NATIONAL LABORATORY

DRAWN BY R.SWANSON	DATE 3/27/96	CHIEF DESIGN ENGINEER D. SHU	DATE 4/11/96
CHECKED BY J.CHANG	4/11/96	GF LEADER T. KUZAY	4/11/96
DESIGNER CHANG/SWANSON		PROJECT MGR.	
RESPONSIBLE ENGINEER J.CHANG	4/11/96	APPROVED/RELEASED	

MATERIAL 1/8" THK. LEAD

SCALE 1=1

SHEET 1 of 1

SIZE D

DRAWING NUMBER P4105090602-320701-00

TITLE ADVANCED PHOTON SOURCE

U2 SPECIALTRANSITION PIPE
1-BM-C
LEAD COIL