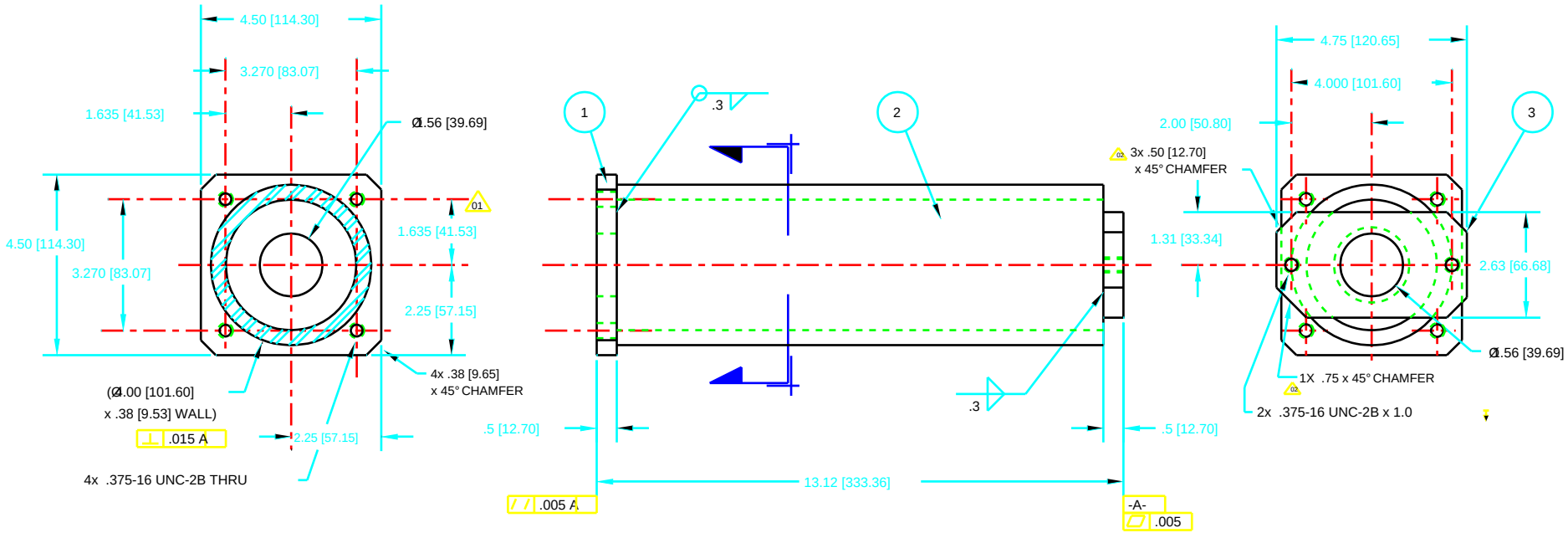

NOTES

FINISH:
COMMERCIAL GRADE CLEAR ZINK PLATING

DIMENSIONS IN BRACKETS [ ] ARE FOR REFERENCE ONLY.

ITEM	DWG/PART NUMBER	NOMENCLATURE OR DESCRIPTION	MATERIAL / SPEC	QTY
3	-	TOP PLATE	MILD STEEL	1
2	-	4.00 O.D. x .375 WALL TUBE	MILD STEEL	1
1	-	BOTTOM PLATE	MILD STEEL	1

PARTS LIST

NOTES:

#1) WELD PER A.W.S. D1.1-92
(ALL WELD SIZES LISTED ARE MINIMUM)

#2) THERMALLY STRESS RELIEVE FOR DIMENSIONAL STABILITY AND REDUCTION OF PEAK STRESS. AFTER FINAL WELD AND BEFORE FINISH MACHINING, BY AN A.N.L. APPROVED METHOD.

USED ON #P4105090504-230000

SYM	CHANGE DESCRIPTION	BY	CHKD	DATE
02	CHAMFER CHG'D.	RS	JB	5-10-96
01	1.635 WAS 1.64	K.P.		5/12/94

REVISIONS

UNLESS OTHERWISE SPECIFIED ALL DIMENSIONS ARE IN INCHES
TOLERANCES
DECIMALS: .X ± .1 [2.5]; .XX ± .01 [0.25]; .XXX ± .005 [0.127]
ANGULAR: ± 0°30'
SURFACE ROUGHNESS 125
REMOVE ALL BURRS AND BREAK SHARP EDGES .03 MAX.
SURFACE TEXTURE TO BE IN ACCORDANCE WITH LATEST ANSI Y14.36
DIMENSIONING & TOLERANCING IN ACCORDANCE WITH LATEST ANSI Y14.5
DO NOT SCALE DRAWING

LOG NUMBER A1850402

THIS DRAWING IS THE PROPERTY OF ARGONNE NATIONAL LABORATORY

DRAWN BY K.POTTER	DATE 3/21/94	CHIEF DESIGN ENGINEER D.SHU	DATE 4/27/94
CHECKED BY J.BARRAZA	3/21/94	GP LEADER T.M.KUZAY	4/27/94
DESIGNER POTTER/BARRAZA	3/21/94	PROJECT MGR.	
RESPONSIBLE ENGINEER J.BARRAZA	4/27/94	APPROVED/RELEASED	

TITLE
ADVANCED PHOTON SOURCE
T4 TELESCOPING LEG
334 MM TRAVEL
SUPPORT PEDESTAL

MATERIAL: SEE PARTS LIST

SCALE 1:2 SHEET 1 OF 2

SIZE C

DRAWING NUMBER P4105090504-230002-02