TRIM LINE

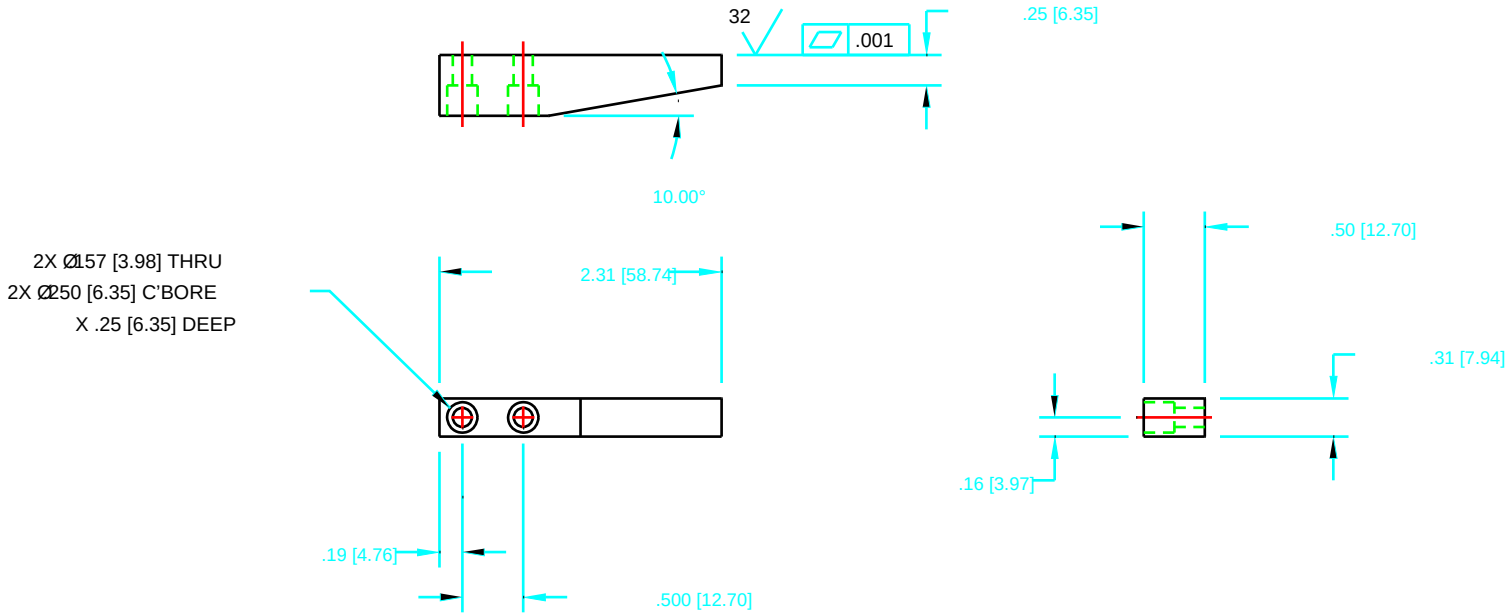

NOTES:

1. ALL DIMENSIONS SHOWN IN [ ] ARE MILLIMETERS AND ARE FOR REFERENCE USE ONLY.

ITEM	DWG/PART NUMBER	NOMENCLATURE OR DESCRIPTION	MATERIAL / SPEC	QTY

PARTS LIST

UNLESS OTHERWISE SPECIFIED:
ALL DIMENSIONS ARE IN INCHES

TOLERANCES

DECIMALS		ANGULAR
.X –	.03 [.762]	– .25°
.XX –	.01 [0.25]	
.XXX –	.005 [0.13]	

SURFACE ROUGHNESS 125

REMOVE ALL BURRS AND BREAK SHARP EDGES .03 MAX.

SURFACE TEXTURE TO BE IN ACCORDANCE WITH LATEST ANSI B46.1

DIMENSIONING & TOLERANCING IN ACCORDANCE WITH LATEST ANSI Y14.5

DO NOT SCALE DRAWING

LOG NUMBER: T2220012-00

THIS DRAWING IS THE PROPERTY OF
ARGONNE NATIONAL LABORATORY

DRAWN BY: A NYMAN	DATE: 2/6/98	CHIEF DESIGN ENGINEER: D. SHU	DATE: 3/19/98
CHECKED BY: J. BARRAZA	DATE: 3/19/98	GP LEADER: T.M. KUZAY	DATE: 3/19/98
DESIGNER: NYMAN/BARRAZA	DATE: 2/6/98	PROJECT MGR.	DATE
RESPONSIBLE ENGINEER: J. BARRAZA	DATE: 3/19/98	APPROVED/RELEASED	DATE

TITLE
ADVANCED PHOTON SOURCE
T2-22
HORIZONTAL STAGE ASSEMBLY
SENSOR ARM

MATERIAL: 316 STAINLESS STEEL

SCALE: 1:1

SHEET 1 of 1

SIZE: B

DRAWING NUMBER: T2-220012-00

SYM	CHANGE DESCRIPTION	BY	CHKD	DATE

REVISIONS

TRIM LINE

TRIM LINE

TRIM LINE