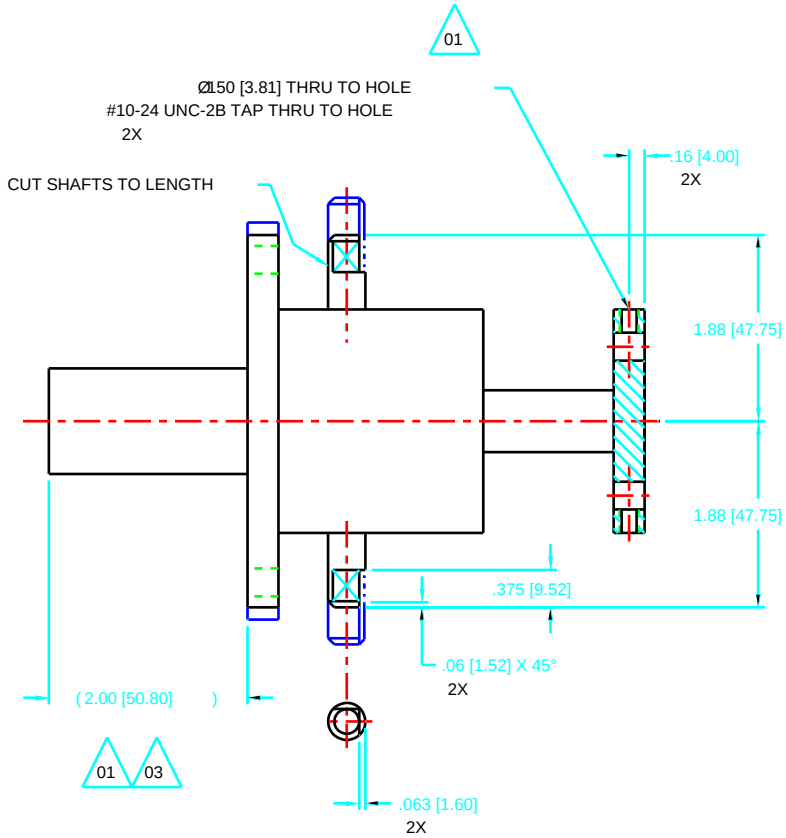

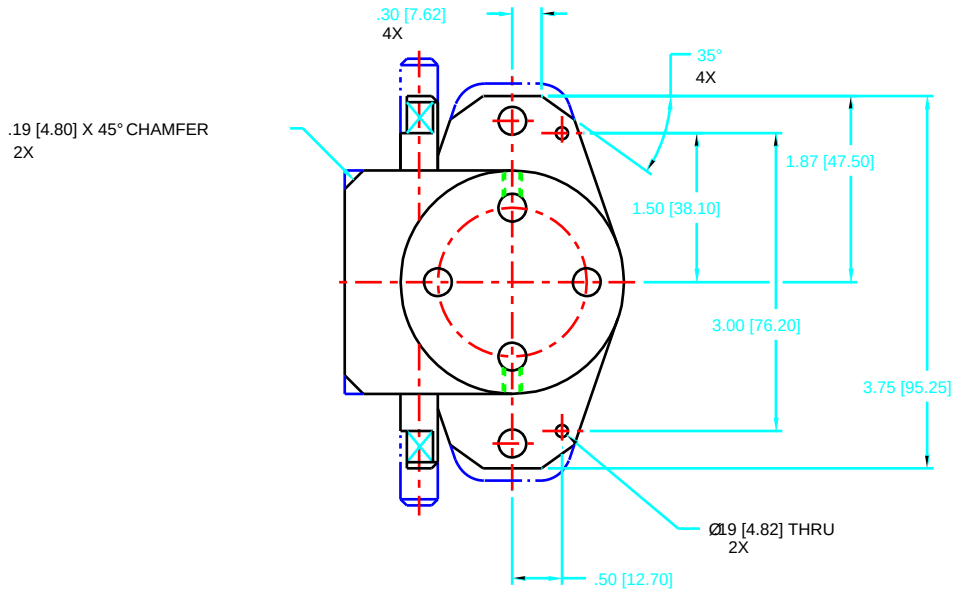

NOTE:

1. MODIFY FROM PURCHASED PART.
   ORDERING INFORMATION: PART #MJ-100-U-2"-20:1-TOP PLATE,
   MODIFIED FOR 3" CLOSED HEIGHT .

2. ALL DIMENSIONS IN [ ] ARE MILLIMETERS AND ARE REFERENCE ONLY.

NOOK INDUSTRIES, INC.
23200 COMMERCE PARK ROAD
CLEVELAND, OH 44122-5869
PHONE: 1-800-321-7800
FAX: (216) 464-4669

SYM	CHANGE DESCRIPTION	BY	CHKD	DATE
03	2.00 WAS 2.88 MAX	KWC	JB	9/95
02	SOURCE WAS DUFF-NORTON	KWC	JB	4/95
01	DIMENSION 2.88 MAX ADDED	CS	JB	4/94
01	#10-32 WAS Ø.09 X .62 DRILL	CS	JB	4/94

REVISIONS

ITEM	DWG/PART NUMBER	NOMENCLATURE OR DESCRIPTION	MATERIAL / SPEC	QTY

PARTS LIST

UNLESS OTHERWISE SPECIFIED:
ALL DIMENSIONS ARE IN INCHES
TOLERANCES
DECIMALS: .XX – .01 [.254]; .XXX – .005 [.127]
ANGULAR – ±.25
SURFACE ROUGHNESS 125

REMOVE ALL BURRS AND BREAK SHARP EDGES .03 MAX.

SURFACE TEXTURE TO BE IN ACCORDANCE WITH LATEST ANSI B46.1

DIMENSIONING & TOLERANCING IN ACCORDANCE WITH LATEST ANSI Y14.5

DO NOT SCALE DRAWING

LOG NUMBER: A1809203

THIS DRAWING IS THE PROPERTY OF ARGONNE NATIONAL LABORATORY

DRAWN BY: E.G.	DATE: 9/93	CHIEF DESIGN ENGINEER: D. SHU	DATE: 10/13/93
CHECKED BY: J. BARRAZA	DATE: 10/1/93	GP LEADER: T.M. KUZAY	DATE: 10/13/93
DESIGNER: E. GALINOVSKAYA, J. BARRAZA	DATE: 10/18/93	PROJECT MGR	
RESPONSIBLE ENGINEER: J. BARRAZA	DATE: 10/1/93	APPROVED/RELEASED	

TITLE: ADVANCED PHOTON SOURCE
T1 50 mm TRAVEL PRECISION VERTICAL STAGE

MACHINE SCREW ACTUATOR ALTERED

MATERIAL: SEE NOTE 1

SCALE: 1:1 | SHEET 1 of 1 | SIZE: C | DRAWING NUMBER: P4105090501-920201-03