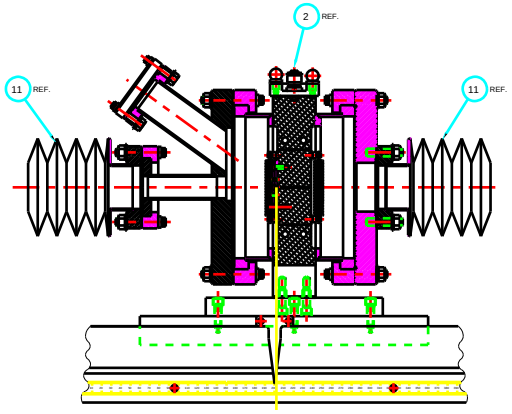

PARTIAL SECTION E-E
(FRONT VIEW)

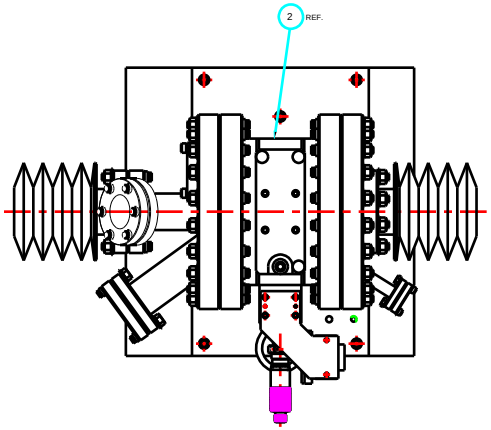

FULL TOP VIEW

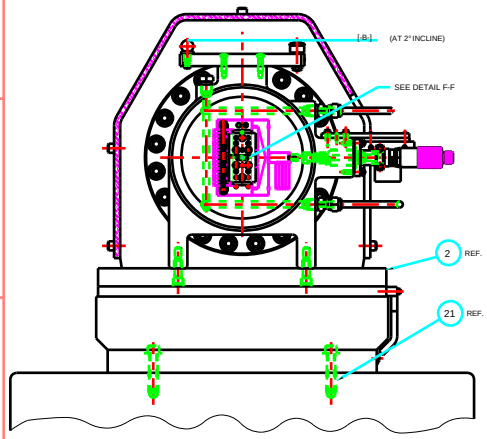

PARTIAL SECTION C-C

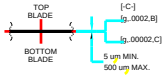

DETAIL F-F

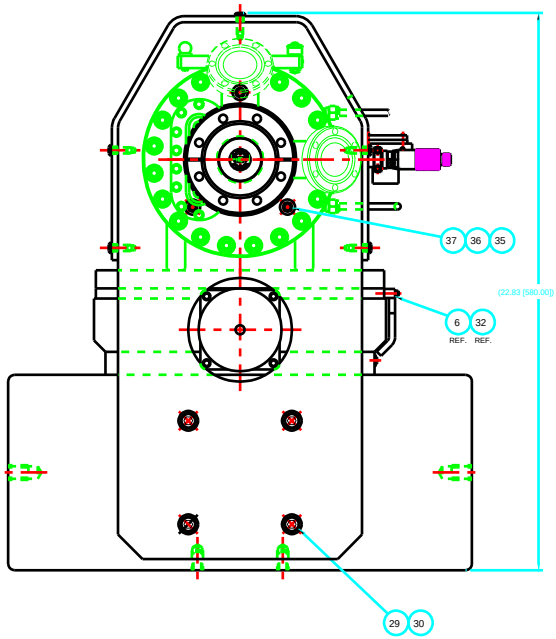

VIEW A-A

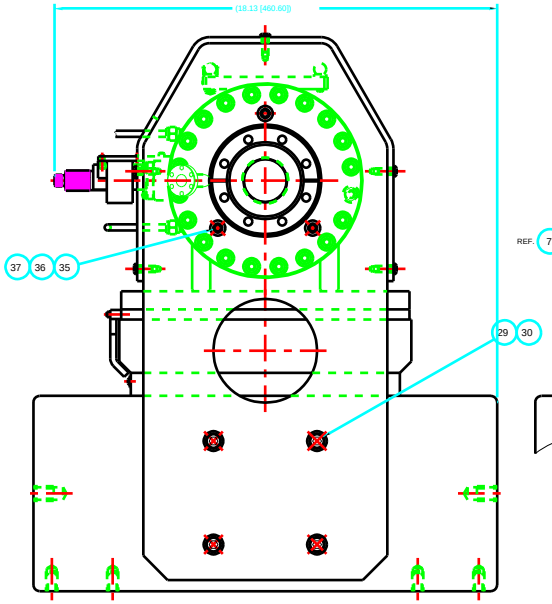

VIEW B-B

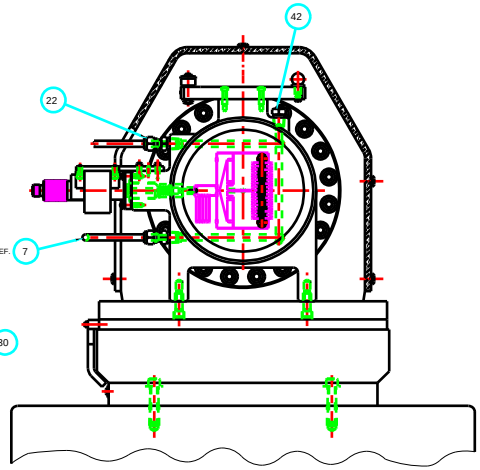

PARTIAL SECTION D-D

3	DWG # WAS P410509150S-200000	RAF	CB	8/97
2	SEE SHEET #2	RAF	CB	7/96
1	SEE SHEET #1	RAF		2/96

DO NOT SCALE DRAWING

L6200000-03-3

DRAWN BY R. KRAKORA	2/95	D.SHU 5/7/95
CHECKED BY C. BRITE	2/95	T.M.KUZAY 5/10/95
DESIGNED R. KRAKORA	2/95	
ENGINEERING APPROVAL C. BRITE	2/95	

ARGONNE NATIONAL LABORATORY

ADVANCED PHOTON SOURCE

L6 SOFT X-RAY
VERTICAL ENTRANCE SLIT

MAIN ASSEMBLY

1:2 3.3 E L6200000-03-3