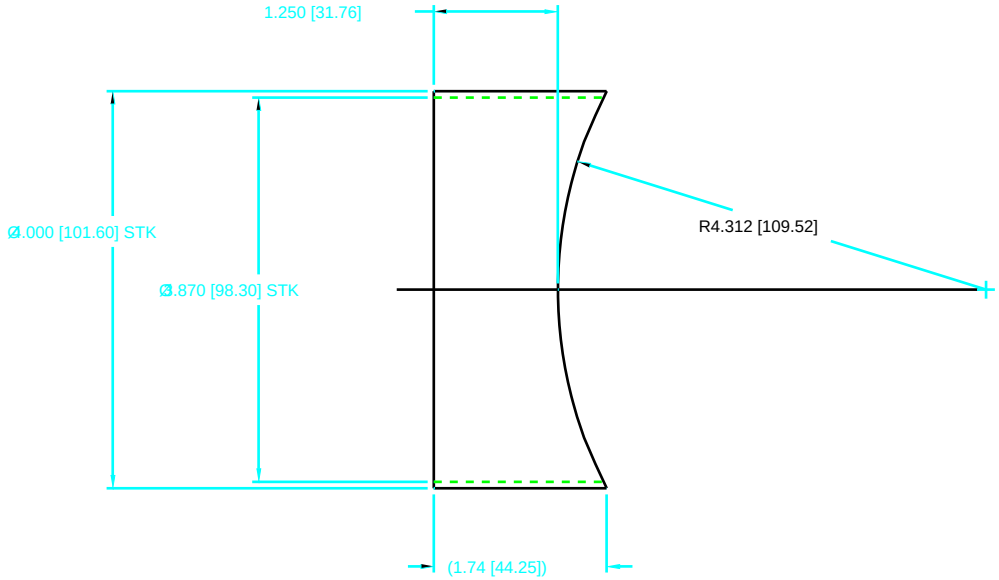

NOTE:

ALL DIMENSIONS IN [ ] ARE MILLIMETERS AND ARE REFERENCE ONLY.

ITEM	DWG/PART NUMBER	NOMENCLATURE OR DESCRIPTION	MATERIAL / SPEC	QTY

PARTS LIST

SYM	CHANGE DESCRIPTION	BY	CHKD	DATE

REVISIONS

UNLESS OTHERWISE SPECIFIED:
ALL DIMENSIONS ARE IN INCHES

TOLERANCES

DECIMALS		ANGULAR
.X –	.015 [.381]	– .25
.XX –	.010 [.254]	
.XXX –	.005 [.127]	

SURFACE ROUGHNESS 125

REMOVE ALL BURRS AND BREAK SHARP EDGES .03 MAX.

SURFACE TEXTURE TO BE IN ACCORDANCE WITH LATEST ANSI B46.1

DIMENSIONING & TOLERANCING IN ACCORDANCE WITH LATEST ANSI Y14.5

DO NOT SCALE DRAWING

LOG NUMBER A17354

THIS DRAWING IS THE PROPERTY OF ARGONNE NATIONAL LABORATORY

DRAWN BY E. GALINOVSKAYA STERLING	DATE 3/94	CHIEF DESIGN ENGINEER D. SHU	DATE	TITLE ADVANCED PHOTON SOURCE L3 BENDING MAGNET WHITE BEAM HORIZONTAL AND VERTICAL SLITS OBSERVING TUBING
CHECKED BY V. TCHESKIDOV	3/94	GP LEADER T. M. KUZAY		
DESIGNER E. GALINOVSKAYA STERLING	3/94	PROJECT MGR		
RESPONSIBLE ENGINEER V. TCHESKIDOV	3/94	APPROVED/RELEASED		

MATERIAL SS 304

SCALE 1:1 SHEET 1 of 1

SIZE C

DRAWING NUMBER P4105091503-200505-00