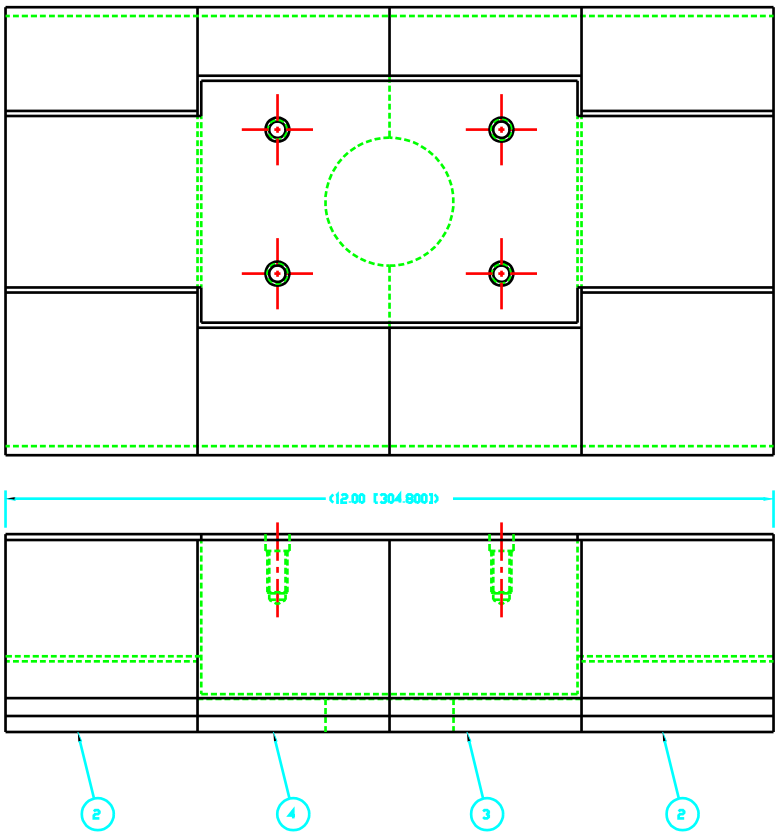

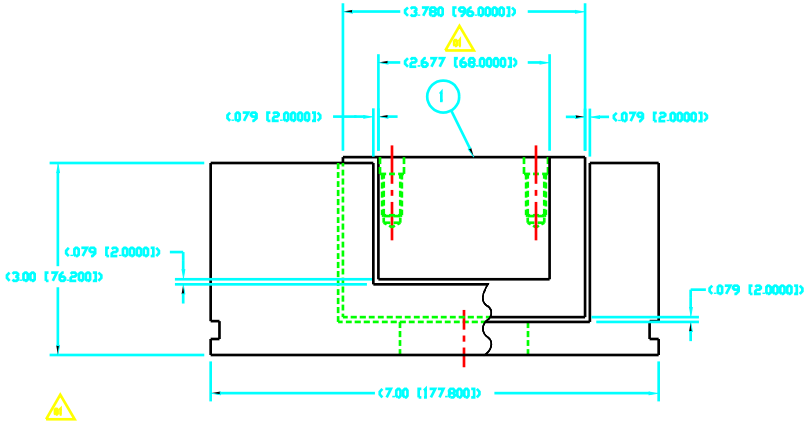

ITEM	QTY	DWG & ELECTRONIC FILE NO.	NOMENCLATURE OR DESCRIPTION	MATERIAL / SPEC	QTY
A18180	4	P41020101B-230004-01	S1 BASE CENTER LEFT	TUNGSTEN	1
A18184	3	P41020101B-230003-01	S1 BASE CENTER RIGHT	TUNGSTEN	1
A18179	2	P41020101B-230002-01	S1 BASE END	TUNGSTEN	2
A08707	1	P41020101B-230001-00	S1 PLUG	TUNGSTEN	1

PARTS LIST

NOTES:

1. THIS IS A ULTRA-HIGH VACUUM ASSEMBLY (UHV).
2. CLEANING: THE COMPONENT MUST BE CLEANED SUCH THAT A UHV PRESSURE OF 1 x 10-9 TORR CAN BE ACHIEVED.
3. HANDLING: CLEAN COMPONENTS SHALL BE HANDLED WITH WHITE SILK GLOVES AND WRAPPED WITH ALUMINUM-FOIL-TYPE DRY ANNEAL A UNDER CLEAN ROOM CONDITIONS.
4. ALL DIMENSIONS IN [ ] ARE MILLIMETERS AND ARE FOR REFERENCE ONLY.

SYM	CHANGE DESCRIPTION	BY	CHKD	DATE
01	UPDATED	RK		
01	DIM. 2.677 [68.0000] WAS 2.598 [66.0000]	RK		

REVISIONS

ELECTRONIC FILE NUMBER: A18178

DRAWN BY: RICK KRAKURA 1/93
CHECKED BY: T. SANCHEZ 1/26/93
ENGINEER: RICK KRAKURA 1/93
RESPONSIBLE ENGINEER: T. SANCHEZ 1/26/93
MATERIAL: SEE B.O.M.

CHIEF DESIGN ENGINEER: D.SHU 8/9/93
DP LEADER: T. KUZAY 8/9/93
PROJECT MGR: DATE
APPROVED/CONTROLLED: DATE

SCALE 1=1 SHEET 1 of 1 SIZE D

THIS DRAWING IS THE PROPERTY OF ARGONNE NATIONAL LABORATORY

TITLE: ADVANCED PHOTON SOURCE
S1 I.D. SAFETY SHUTTER
TUNGSTEN BLOCK
ASSEMBLY

DRAWING NUMBER: P41020101B-230000-01

PLOT SCALE:1=1