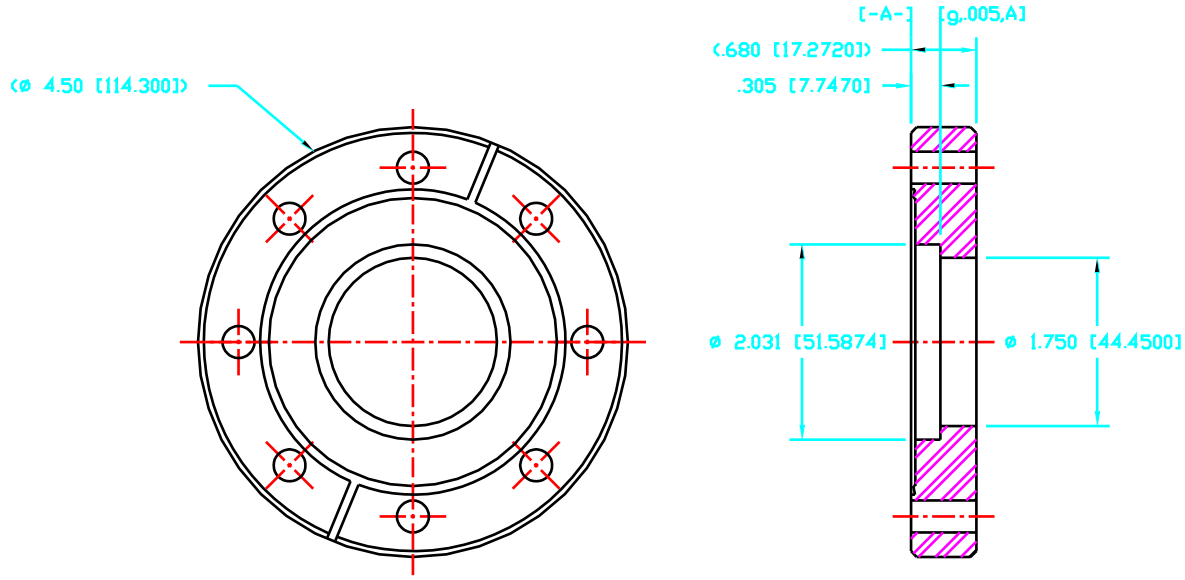

NOTES: (UNLESS OTHERWISE SPECIFIED)

1. ALL SURFACES MUST BE MACHINED FOR CLEAN UP.
2. BREAK ALL SHARP EDGES & DEBURR ALL HOLES.
3. DO NOT USE SULFUR, BEARING OILS OR ABRASIVES.
4. WHEN MACHINING, USE ONLY: CIMCOOL 5 STAR 40, KOOLMIST No. 88, CIMPERIAL No. 1011, OR EQUIVALENT LUBRICANT APPROVED BY STANFORD UNIVERSITY.
5. THIS IS AN ULTRA-HIGH VACUUM COMPONENT.
6. MATERIAL: 304 SST
7. ALL DIMENSIONS IN [ ] ARE MILLIMETERS AND ARE FOR REFERENCE ONLY.

MODIFY FROM PURCHASED PART:
MDC PRODUCTS, #110018 NON-ROTATABLE FLANGE

ITEM	DWG. & ELECTRONIC FILE No.	NOMENCLATURE OR DESCRIPTION	MATERIAL / SPEC	QTY

PARTS LIST

SYM	CHANGE DESCRIPTION	BY	CHKD	DATE

REVISIONS

UNLESS OTHERWISE SPECIFIED ALL DIMENSIONS ARE IN INCHES
TOLERANCES
DECIMALS: .X ±.015; .XX ±.010; .XXX ±.005
ANGULAR: ±.25°
SURFACE ROUGHNESS 250
REMOVE ALL BURRS AND BREAK SHARP EDGES .03 MAX.
SURFACE TEXTURE TO BE IN ACCORDANCE WITH LATEST ANSI B46
DIMENSIONING & TOLERANCING IN ACCORDANCE WITH LATEST ASME Y14
DO NOT SCALE DRAWING

ELECTRONIC FILE NUMBER: A08887

THIS DRAWING IS THE PROPERTY OF
ARGONNE NATIONAL LABORATORY

DRAWN BY: RICK KRAKORA	DATE: 12/92	CHIEF DESIGN ENGINEER: D. SHU	DATE: 8/11/93
CHECKED BY: T. SANCHEZ	DATE: 8/11/93	GP LEADER: T. KUZAY	DATE: 8/11/93
DESIGNER: RICK KRAKORA	DATE: 12/92	PROJECT MGR	DATE
RESPONSIBLE ENGINEER: T. SANCHEZ	DATE: 8/11/93	APPROVED/RELEASED	DATE

TITLE
ADVANCED PHOTON SOURCE
SI SAFETY SHUTTER
PROX-SWITCH ASSEMBLY
FLANGE MODIFIED

MATERIAL: SEE B.O.M.
SCALE: 1=1
SHEET: 1 of 1
SIZE: C
DRAWING NUMBER: P4102010108-220002-00

PLOT SCALE: 1=1