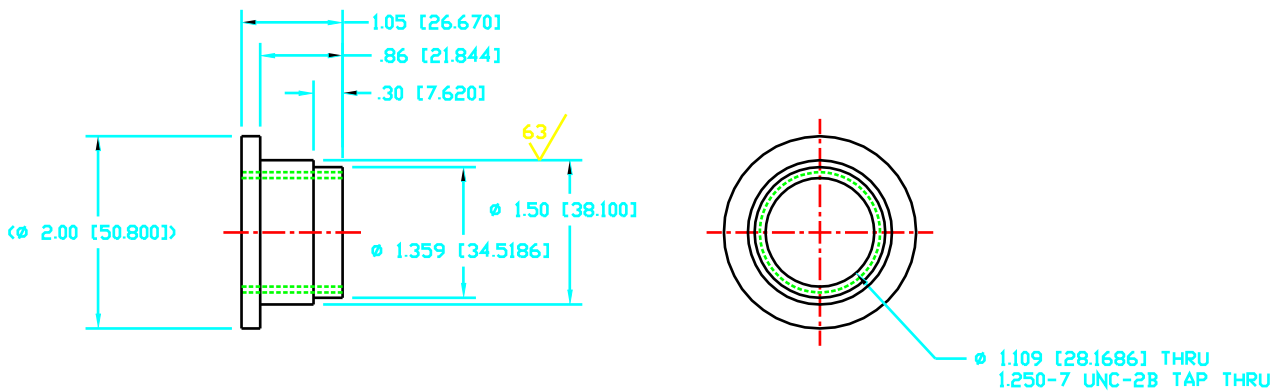

NOTES:

1. THIS IS A ULTRA-HIGH VACUUM COMPONENT (UHV).
2. WHEN MACHINING VACUUM PARTS, USE OF SILICONE AND SULPHUR-BASED CUTTING FLUIDS IS PROHIBITED. USE ONE OF THE FOLLOWING:
   A) CIMCOOL 5 STAR 49
   B) TRIM SOL
3. ELECTROPOLISH, TO 63 MICROINCH RMS. CLEAN PROCESS INVOLVING DEGREASING, WASHING AND DRY NITROGEN BLOW DOWN BEFORE ELECTROPOLISHING.
4. ALL DIMENSIONS IN [ ] ARE MILLIMETERS AND ARE FOR REFERENCE ONLY.

ITEM	DWG. & ELECTRONIC FILE No.	NOMENCLATURE OR DESCRIPTION	MATERIAL / SPEC	QTY

PARTS LIST

SYM	CHANGE DESCRIPTION	BY	CHKD	DATE

REVISIONS

UNLESS OTHERWISE SPECIFIED ALL DIMENSIONS ARE IN INCHES
TOLERANCES
DECIMALS: .X ±.015; .XX ±.010; .XXX ±.005
ANGULAR: ±.25°
SURFACE ROUGHNESS 125
REMOVE ALL BURRS AND BREAK SHARP EDGES .03 MAX.
SURFACE TEXTURE TO BE IN ACCORDANCE WITH LATEST ANSI B46
DIMENSIONING & TOLERANCING IN ACCORDANCE WITH LATEST ASME Y14
DO NOT SCALE DRAWING

ELECTRONIC FILE NUMBER: A08725

THIS DRAWING IS THE PROPERTY OF ARGONNE NATIONAL LABORATORY

DRAWN BY: RICK KRAKORA	DATE: 12/92	CHIEF DESIGN ENGINEER: D. SHU	DATE: 8/11/93
CHECKED BY: T. SANCHEZ	DATE: 8/11/93	GP LEADER: T. KUZAY	DATE: 8/11/93
DESIGNER: RICK KRAKORA	DATE: 12/92	PROJECT MGR	DATE
RESPONSIBLE ENGINEER: T. SANCHEZ	DATE: 8/11/93	APPROVED/RELEASED	DATE

TITLE: ADVANCED PHOTON SOURCE
SI SAFETY SHUTTER
PROX-SWITCH ASSEMBLY
BUSHING

MATERIAL: SST 304 ø 2.00 x SEE DWG
SCALE: 1=1
SHEET: 1 of 1
SIZE: C
DRAWING NUMBER: P4102010108-220001-00

PLOT SCALE: 1=1