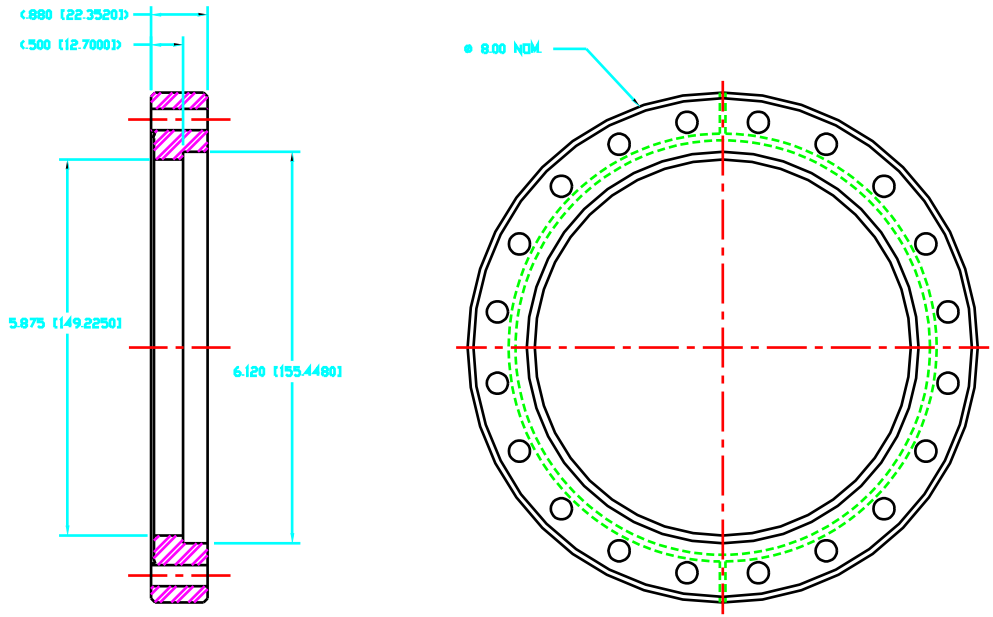

NOTE:
1. THIS IS A ULTRA-HIGH VACUUM COMPONENT (UHV).
2. WHEN MACHINING VACUUM PARTS, USE OF SILICONE AND SULPHUR-BASED CUTTING FLUIDS IS PROHIBITED. USE ONE OF THE FOLLOWING:
   A) CIMCOOL 5 STAR 49
   B) TRIM SOL
3. MATERIAL: 304 SST MODIFY FROM PURCHASED PART MDC #110031; NON-ROTATABLE FLANGE
4. ALL DIMENSIONS IN [ ] ARE MILLIMETERS AND ARE FOR REFERENCE ONLY.

ITEM	DWG & ELECTRONIC FILE NO	NOMENCLATURE OR DESCRIPTION	MATERIAL / SPEC	QTY

PARTS LIST

SYM	CHANGE DESCRIPTION	BY	CHKD	DATE

REVISIONS

ELECTRONIC FILE NUMBER: A08716

THIS DRAWING IS THE PROPERTY OF ARGONNE NATIONAL LABORATORY

DRAWN BY: RICK KRAKORA	DATE: 1/93	CHIEF DESIGN ENGINEER: D.SHU	DATE: 8/1/10
CHECKED BY: T. SANCHEZ	DATE: 8/1/10	APPROVED: T.M. KUZAY	DATE: 8/1/10
REVISED: RICK KRAKORA	DATE: 1/93	PROJECT MGR	DATE
REVISED: T. SANCHEZ	DATE: 8/1/10	APPROVED/RELEASED	DATE

MATERIAL: SEE ABOVE

SCALE: 1=1 SHEET 1 of 1 SIZE: D

TITLE: ADVANCED PHOTON SOURCE
SI SAFETY SHUTTER
CHAMBER WELDMENT
FLANGE MODIFIED

DRAWING NUMBER: P4102010108-210004-00

PLOT SCALE:1=1