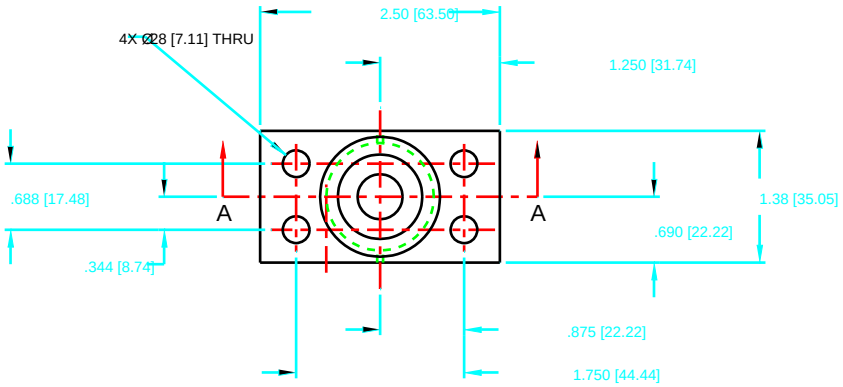

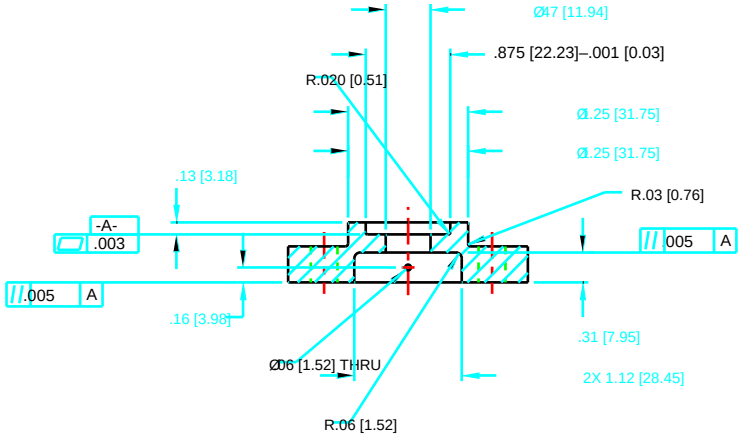

SECTION A - A

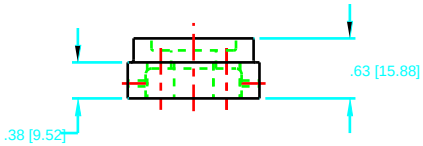

NOTES:

1. THIS IS A ULTRA- HIGH VACUUM COMPONENT (UHV)
2. WHEN MACHINING VACUUM PARTS, USE OF SILICONE AND SULPHUR-BASED CUTTING FLUIDS IS PROHIBITED. USE ONE OF THE FOLLOWING:
   A) CIMCOOL 5 STAR 49
   B) TRIM SOL
3. FINISHING: WHEN MACHINING VACUUM PARTS USE OF ABRASIVE PAPER OR SANDING DISCS, BUFFING OR POLISHING COMPOUNDS, OR RESIN-BONDED GRINDING WHEELS IS PROHIBITED
4. CLEANING: THE COMPONENT MUST BE CLEANED SUCH THAT A UHV PRESSURE OF 1 X 10 -9 TORR CAN BE ACHIEVED
5. HANDLING: THE COMPONENTS SHALL BE HANDLED WITH WHITE SILK GLOVES AND WRAPPED WITH ALUMINUM FOIL TYPE DRY ANNEAL AND UNDER CLEAN ROOM CONDITIONS
6. DIMENSIONS IN [ ] ARE MILLIMETERS AND FOR REF. ONLY

SYM	CHANGE DESCRIPTION	BY	CHKD	DATE

REVISIONS

ITEM	DWG/PART NUMBER	NOMENCLATURE OR DESCRIPTION	MATERIAL / SPEC	QTY

PARTS LIST

UNLESS OTHERWISE SPECIFIED: ALL DIMENSIONS ARE IN INCHES

TOLERANCES

DECIMALS	ANGULAR
.X – .1 [2.5]	– 0°30'
.XX – .01 [0.25]	
.XXX – .005 [0.13]	

SURFACE ROUGHNESS 125

REMOVE ALL BURRS AND BREAK SHARP EDGES .03 MAX.

SURFACE TEXTURE TO BE IN ACCORDANCE WITH LATEST ANSI B46.1

DIMENSIONING & TOLERANCING IN ACCORDANCE WITH LATEST ANSI Y14.5

DO NOT SCALE DRAWING

LOG NUMBER P8620003-00

THIS DRAWING IS THE PROPERTY OF ARGONNE NATIONAL LABORATORY

DRAWN BY	MUSCIA	DATE	12/22/97	CHIEF DESIGN ENGINEER D. Shu	DATE 1/27/98
CHECKED BY	J. CHANG	DATE	1/23/98	GP LEADER T.M. Kuzay	DATE 2/5/98
DESIGNER	CHANG/MUSCIA	DATE	12/22/97	PROJECT MGR.	DATE
RESPONSIBLE ENGINEER	J. CHANG	DATE	1/23/98	APPROVED/RELEASED	DATE

TITLE
ADVANCED PHOTON SOURCE
P8-60 ID
MONO. INTEGRAL SHUTTER
TUNGSTEN BRACKET

MATERIAL 304 STAINLESS STEEL

SCALE 1:1 SHEET 1 of 1

SIZE C

DRAWING NUMBER P8-620003-00