(C)	PLOT SCALE: .5=1	DWG. SCALE: 2	A0950301

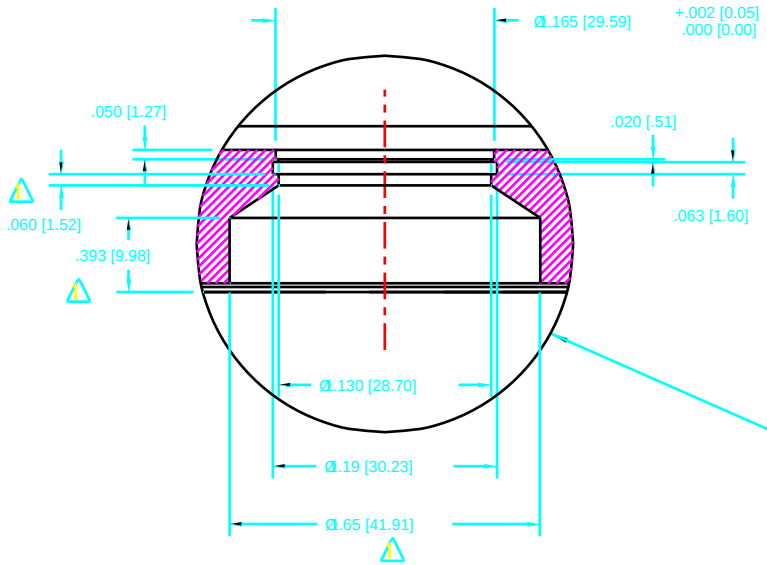

SCALE 4X

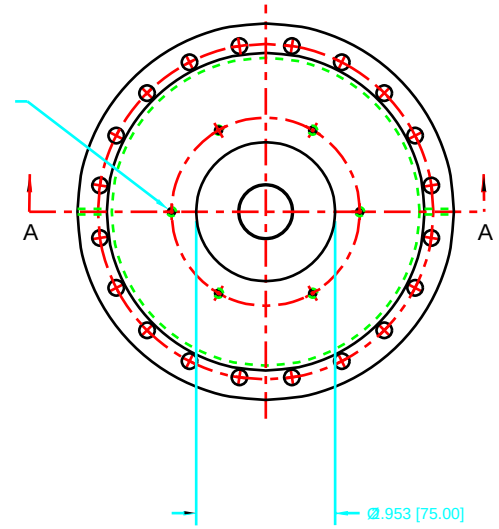

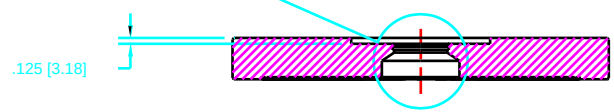

SECTION A - A

NOTES:

1. MAKE FROM MDC'S VACUUM FLANGE CAT. #110030
2. WHEN MACHINING VACUUM PARTS, USE OF SILICONE AND SULPHUR-BASED CUTTING FLUIDS IS PROHIBITED. USE ONE OF THE FOLLOWING:
   A) CIMCOOL 5 STAR 49
   B) TRIM SOL
3. THIS IS A UHV PART, ELECTROPOLISHING IS NEEDED. PRIOR TO ELECTROPOLISHING, THE PART NEEDS TO GO THROUGH A MULTIPLE STEP CLEANING PROCESS INVOLVING DEGREASING, WASHING AND DRY NITROGEN BLOW DOWN.
4. KEEP THE PART CLEAN, AND WRAP FOR UHV PACKING WITH ALUMINUM FOIL.
5. DIMENSIONS IN [ ] ARE MILLIMETERS

SYM	CHANGE DESCRIPTION	BY	CHKD	DATE
1	SCALE 4X WAS SCALE 2X			
	.060 [1.52], .393 [9.98], &			
	Ø1.65 [41.91] ADDED	M.J.M.		

REVISIONS

ITEM	DWG/PART NUMBER	NOMENCLATURE OR DESCRIPTION	MATERIAL / SPEC	QTY

PARTS LIST

UNLESS OTHERWISE SPECIFIED ALL DIMENSIONS ARE IN INCHES
TOLERANCES
DECIMALS: .X ± .03 [.7620]; .XX ± .01 [0.25]; .XXX ± .005 [0.127]
ANGULAR: ± .25°
SURFACE ROUGHNESS 125
REMOVE ALL BURRS AND BREAK SHARP EDGES .03 MAX.
SURFACE TEXTURE TO BE IN ACCORDANCE WITH LATEST ANSI B46
MACHINING & TOLERANCING IN ACCORDANCE WITH LATEST ANSI Y14
DO NOT SCALE DRAWING

DWG NUMBER: A0950301

THIS DRAWING IS THE PROPERTY OF ARGONNE NATIONAL LABORATORY

DRAWN BY: MUSCIA	DATE: 3/5/93	CHIEF DESIGN ENGINEER: D. SHU	DATE: 8/27/93
CHECKED BY: D. SHU	8/27/93	OP LEADER: T.M. KUZAY	8/27/93
DESIGNER: MUSCIA	8/27/93	PROJECT MGR.	
RESPONSIBLE ENGINEER: D. SHU	8/27/93	APPROVED/RELEASED	

TITLE: ADVANCED PHOTON SOURCE
P1 1- ST PHOTON SHUTTER
SLOW ACTUATOR
LOWER BELLOWS FLANGE

MATERIAL: SEE NOTE #1

SCALE: HALF
SHEET 1 of 1

SIZE: C

DRAWING NUMBER: P4102010103-220202-01