(E)	PLOT SCALE: 1=1	DWG. SCALE: 1	

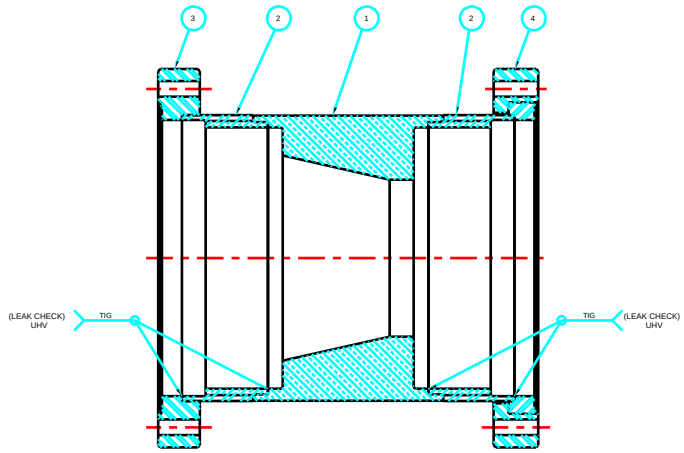

SECTION A-A

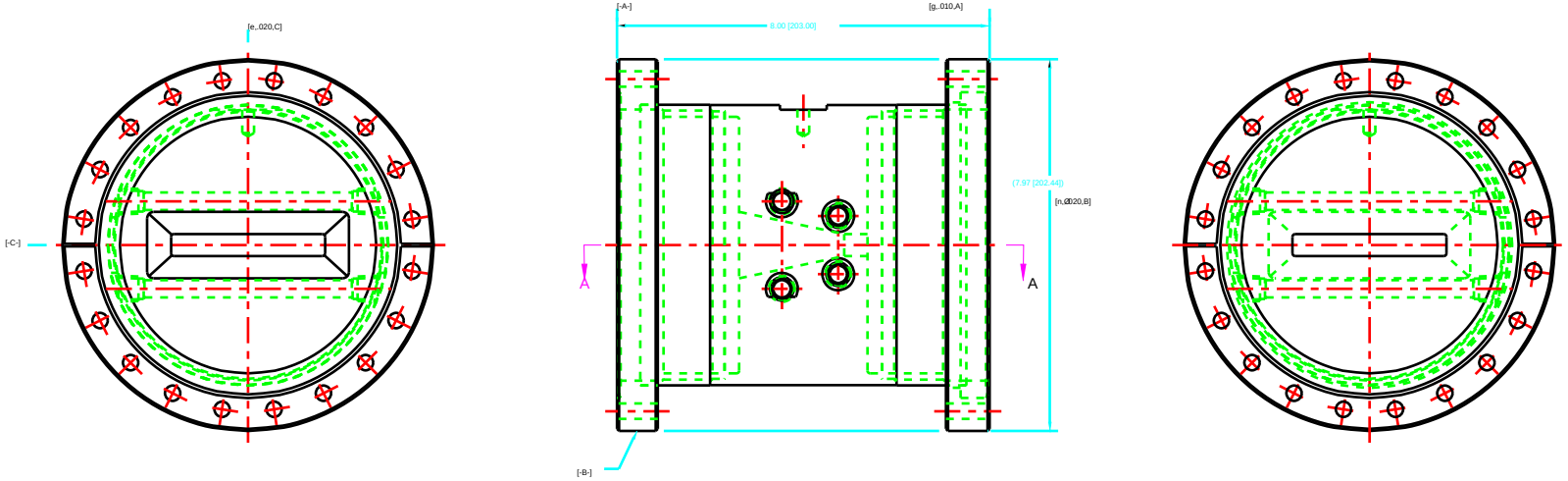

NOTES:

1. THIS IS A UHV CHAMBER. A MULTIPLE STEP CLEANING PROCESS INVOLVING DEGREASING, WASHING AND DRY NITROGEN BLOWDOWN IS NEEDED BEFORE WELDING.
2. KEEP THE PART CLEAN, AND WRAP FOR UHV PACKING WITH ALUMINUM FOIL.
3. USING A MASS SPECTROMETER WITH MINIMUM SENSITIVITY FOR HELIUM OF 2 x 10 -10 STANDARD CC/SEC PER LEAK METER DIVISION, SUCH AS:

   ALCATEL ASM-11OTCL
   VARIAN NCR 925 OR 936
   VEECO MS-9, MS-90 OR MS-18
   DuPONT CEC 24-120B

   CALIBRATION OF THE LEAK DETECTOR SENSITIVITY SHALL BE PERFORMED JUST PRIOR TO TESTING.
   FINAL TEST WILL CONSIST OF SURROUNDING THE CHAMBER (BAGGING) WITH HELIUM. THE CHAMBER WILL BE REJECTED IF A 2% DEFLECTION IN THE MOST SENSITIVE RANGE OF THE LEAK DETECTOR IS SENSED WITHIN 1 MIN.
4. ALL DIMENSIONS WITH [ ] ARE IN MILLIMETERS.

SOURCE

1 MDC VACUUM PRODUCTS CORP.
23842 CABOT BOULEVARD
HAYWARD, CA. 94545-1651
(510)-887-6100

ITEM	DWG/PART NUMBER	NOMENCLATURE OR DESCRIPTION	MATERIAL / SPEC	QTY
4	MDC #100031	8" O.D. ROTATABLE FLANGE	SST 304	1
3	MDC #110031	8" O.D. NON-ROTATABLE FLANGE	SST 304	1
2	P4102020101-220102-01	M3 EXPLOSIVE BONDING TUBE		2
1	P4102020101-220101-00	M3 COOLING BLOCK	O.F.H.C. COPPER	1

PARTS LIST

SYM	CHANGE DESCRIPTION	BY	CHKD	DATE
1	UPDATE	RAF	J.C.	7/6/93

REVISIONS

UNLESS OTHERWISE SPECIFIED: ALL DIMENSIONS ARE IN INCHES
TOLERANCES:
DECIMALS ANGULAR
X = .015 ± .25
XX = .010
XXX = .005
SURFACE ROUGHNESS 125
REMOVE ALL BURRS AND BREAK SHARP EDGES .03 MAX.
SURFACE TEXTURE TO BE IN ACCORDANCE WITH LATEST ANSI B46.1
DIMENSIONING & TOLERANCING IN ACCORDANCE WITH LATEST ANSI Y14.5
DO NOT SCALE DRAWING

LOG NUMBER: A12198

THIS DRAWING IS THE PROPERTY OF ARGONNE NATIONAL LABORATORY

DRAWN BY: R. KRAKORA	DATE: 3/93	CHIEF DESIGN ENGINEER: D. SHU	DATE: 6/28/93
CHECKED BY: J. CHANG	6/25/93	CP LEADER: T.M. KUZAY	6/28/93
DESIGNER: R. KRAKORA	3/93	PROJECT MGR.	
RESPONSIBLE ENGINEER: J. CHANG	6/25/93	APPROVED/RELEASED	

MATERIAL: SEE ABOVE

TITLE: ADVANCED PHOTON SOURCE
M3 BM FRONT END
SECOND FIXED MASK
CHAMBER WELDMENT

SCALE: 1:1 SHEET 1:1 SIZE: E DRAWING NUMBER: P4102020101-220100-01