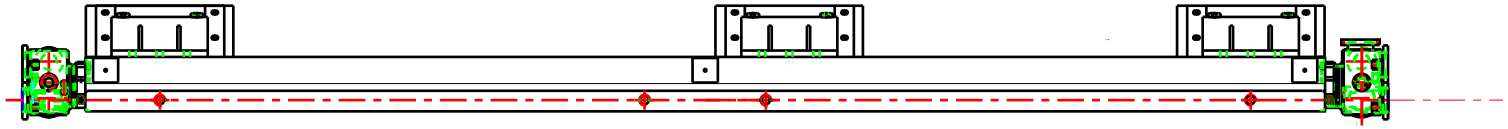

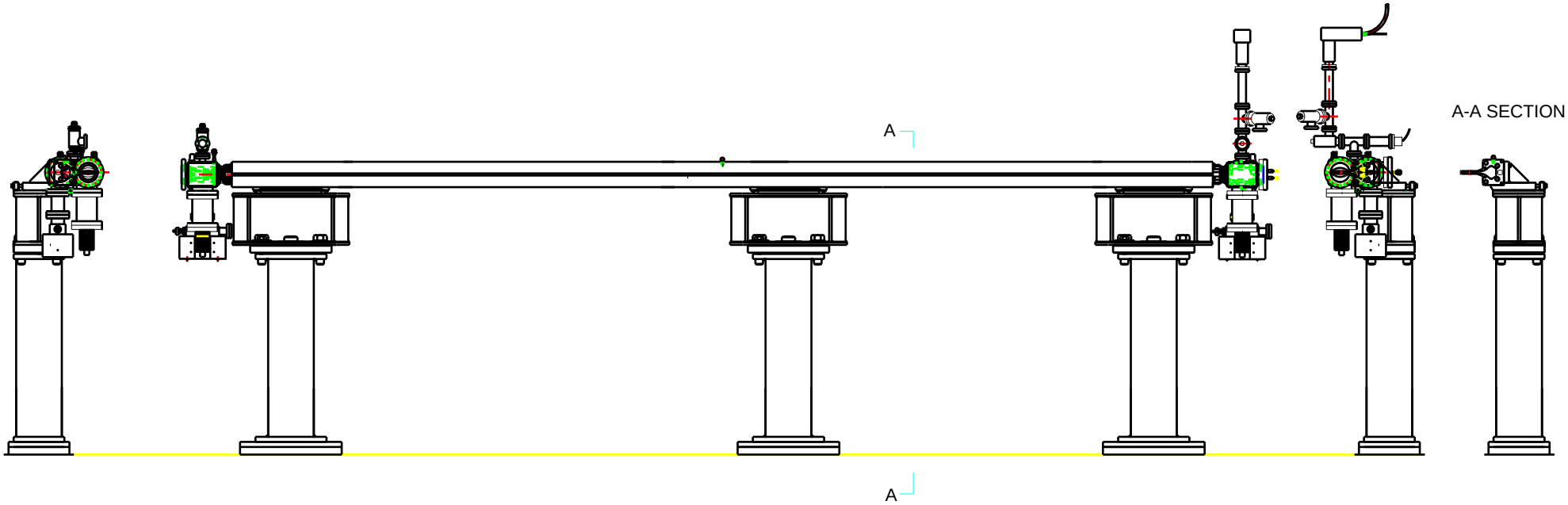

S10265A for SLS		TITLE Assembly of 5M long ID Vacuum Chamber Boxes, Pumps and Supports	
DESIGN Shenglan Xu			
CHECK E. Trakhtenberg			DATE 06/02/1999