RELEASED

(℄	PLOT SCALE: 1=1.0	DWG. SCALE: 1.0	A15547

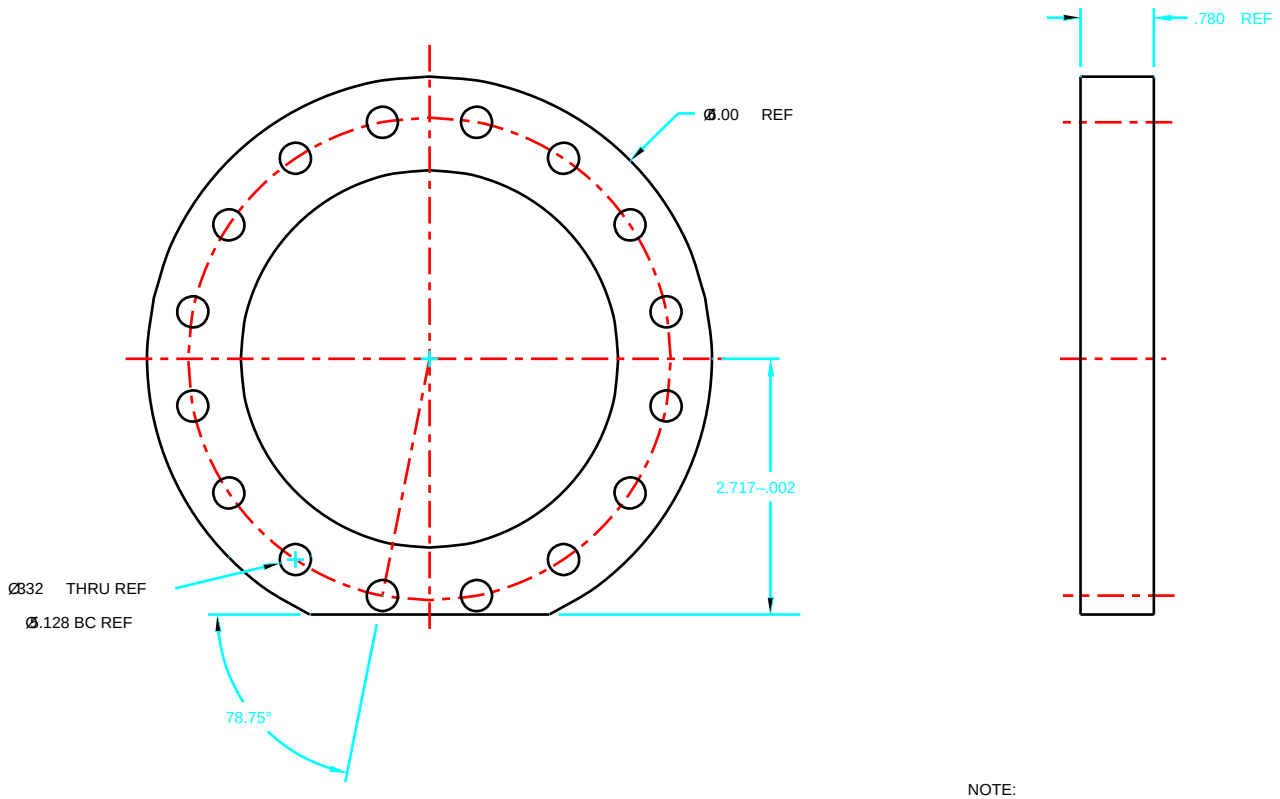

NOTE:

1. FINISHED PART MUST BE FREE OF PARTICLES AND CHEMICAL FILM.

2. PROTECT FLANGE FACE FROM NICKS, SCRATCHES, DIRT AND CONTAMINANTS.

ITEM	DWG/PART NUMBER	NOMENCLATURE OR DESCRIPTION	MATERIAL / SPEC	QTY

PARTS LIST

SYM	CHANGE DESCRIPTION	BY	CHKD	DATE
1	NOTE 1,2 ADDED	RHP		20JU94

REVISIONS

UNLESS OTHERWISE SPECIFIED: ALL DIMENSIONS ARE IN INCHES

TOLERANCES

DECIMALS: .X – .1; .XX – .02; .XXX – .005

ANGULAR – .25

SURFACE ROUGHNESS 125

REMOVE ALL BURRS AND BREAK SHARP EDGES .03 MAX.

SURFACE TEXTURE TO BE IN ACCORDANCE WITH LATEST ANSI B46.1

DIMENSIONING & TOLERANCING IN ACCORDANCE WITH LATEST ANSI Y14.5

DO NOT SCALE DRAWING

LOG NUMBER A1554701

THIS DRAWING IS THE PROPERTY OF ARGONNE NATIONAL LABORATORY

DRAWN BY RH PIECH	DATE 22DEC93	GP LEADER P STYKA	DATE 1/17/94
CHECKED BY		PROJECT MGR	
DESIGNER RH PIECH	22DEC93	APPROVED/RELEASED	
RESPONSIBLE ENGINEER T KLIPPERT	1/12/94		

TITLE

ADVANCED PHOTON SOURCE
EXPERIMENTAL FACILITIES
TECHNICAL COMPONENTS
INSERTION DEVICE
FLANGE, BLANK, NEG

MATERIAL: MDC P/N 110025 OR APPD EQUIV

SCALE 1:1 | SHEET 1 of 1 | SIZE C | DRAWING NUMBER P410103-100218-01