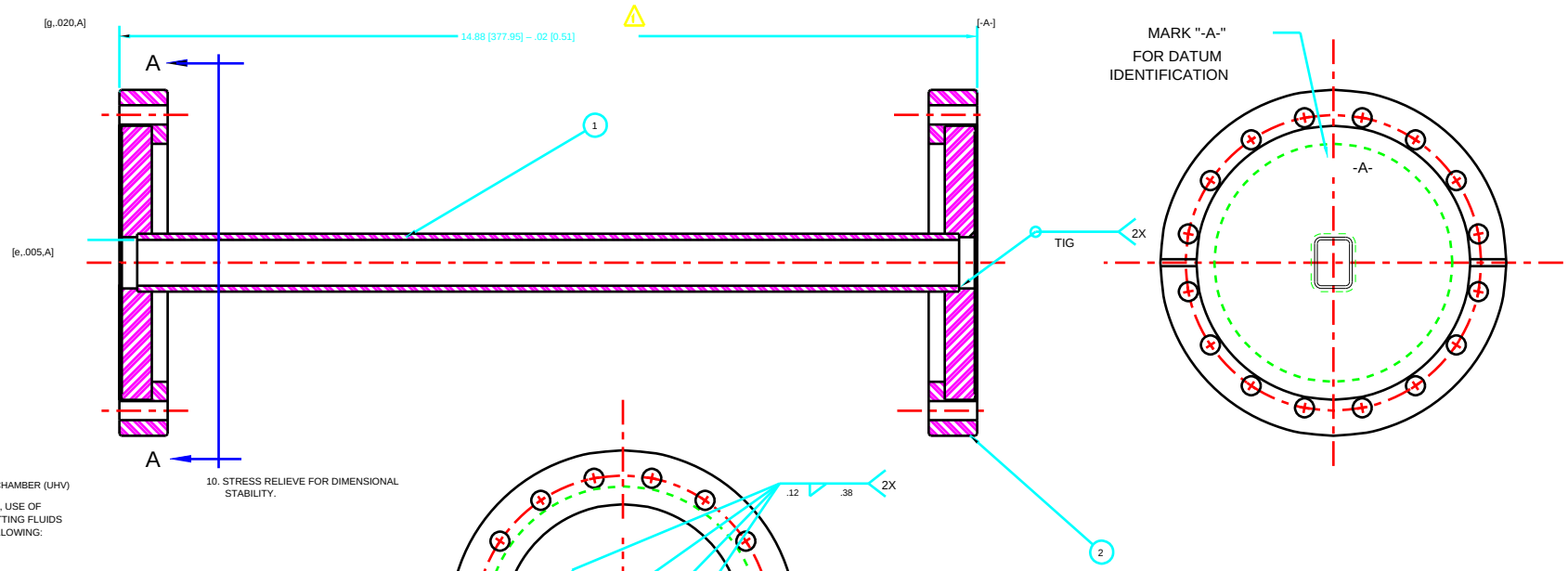

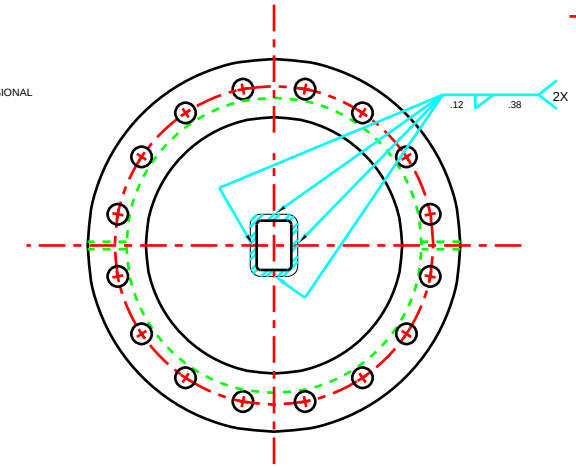

SECTION A-A

NOTES:

1. THIS IS A ULTRA - HIGH - VACUUM CHAMBER (UHV)

2. WHEN MACHINING VACUUM PARTS, USE OF SILICONE AND SULPHUR-BASED CUTTING FLUIDS IS PROHIBITED. USE ONE OF THE FOLLOWING:
   A) CIMCOOL 5 STAR 49
   B) TRIM SOL

3. ELECTROPOLISHING IS NEEDED BEFORE WELDING. PRIOR TO ELECTROPOLISHING, THE CHAMBER NEEDS TO GO THROUGH A MULTIPLE STEP CLEANING PROCESS INVOLVING DEGREASING, WASHING AND DRY NITROGEN BLOW DOWN. THE VACUUM SIDE SURFACE ROUGHNESS, OF THE CHAMBER, SHALL BE BETTER THAN 63 MICROINCHES RMS AFTER ELCTROPOLISHING.

4. WELDS SHALL BE GAS TUNGSTEN ARC (GTAW) OR TUNGSTEN INERT GAS (TIG) ON VACUUM SIDE OF JOINT

5. VACUUM CHAMBER SHALL BE LEAK TESTED USING A MASS SPECTROMETER WITH MINIMUM SENSITIVITY FOR HELIUM OF 2 X 10 -10 STANDARD CC/SEC PER LEAK METER DIVISION, SUCH AS

   ALCATEL SAM-110TCL
   Du PONT CEC 24-120B
   VARIAN MS-9, MS-90 OR MS-18

   CALIBRATION OF THE LEAK DETECTOR SENSITIVITY SHALL BE PERFORMED JUST PRIOR TO TESTING.

   FINAL TEST WILL CONSIST OF SURROUNDING THE ASSEMBLY (BAGGING) WITH HELIUM. THE ASSEMBLY WILL BE REJECTED IF A 2% DEFLECTION ON THE MOST SENSITIVE RANGE OF THE LEAK DETECTOR IS SENSED WITHIN 1 MIN.

6. KEEP THE ASSEMBLY CLEAN, AND WRAP FOR UHV PACKING WITH ALUMINUM FOIL.

7. DIMENSIONS IN [ ] ARE MILLIMETERS AND FOR REF. ONLY

8. MACHINE FINISH FOR ALL VACUUM SURFACES BEFORE ELECTROPOLISHING

9. ALL MATERIAL IS 304 STAINLESS STEEL UNLESS OTHERWISE SPECIFIED

10. STRESS RELIEVE FOR DIMENSIONAL STABILITY.

ITEM	DWG/PART NUMBER	NOMENCLATURE OR DESCRIPTION	MATERIAL / SPEC	QTY
2	P4105090403-210101	FLANGE		2
1	P4105090403-210102	TUBE		1

PARTS LIST

SYM	CHANGE DESCRIPTION	BY	CHKD	DATE
1	DIM 14.88 WAS 14.48	RAF		11/95

REVISIONS

UNLESS OTHERWISE SPECIFIED: ALL DIMENSIONS ARE IN INCHES

TOLERANCES
DECIMALS: .X ± .1 [2.5]; .XX ± .01 [0.25]; .XXX ± .005 [0.13]
ANGULAR: ± 0°30'

SURFACE ROUGHNESS 125

REMOVE ALL BURRS AND BREAK SHARP EDGES .03 MAX.

SURFACE TEXTURE TO BE IN ACCORDANCE WITH LATEST ANSI B46.1

DIMENSIONING & TOLERANCING IN ACCORDANCE WITH LATEST ANSI Y14.5

DO NOT SCALE DRAWING

LOG NUMBER: A2360301

THIS DRAWING IS THE PROPERTY OF: ARGONNE NATIONAL LABORATORY

DRAWN BY: FUHRMANN	DATE: 10/30/95	CHIEF DESIGN ENGINEER: D. SHU	DATE: 11/1/95
CHECKED BY: J. BARRAZA	DATE: 10/31/95	GP LEADER: T.M. KUZAY	DATE: 11/1/95
DESIGNER: BARRAZA/FUHRMANN	DATE:	PROJECT MGR.	DATE:
RESPONSIBLE ENGINEER: J. BARRAZA	DATE: 10/31/95	APPROVED/RELEASED	DATE:

MATERIAL: SEE PARTS LIST

TITLE: ADVANCED PHOTON SOURCE
K3-21
2-ID-A
1ST COLLIMATOR ASSEMBLY
VACUUM CHAMBER

SCALE: 1:1 SHEET 1 OF 1

SIZE: D

DRAWING NUMBER: P4105090403-210100-01