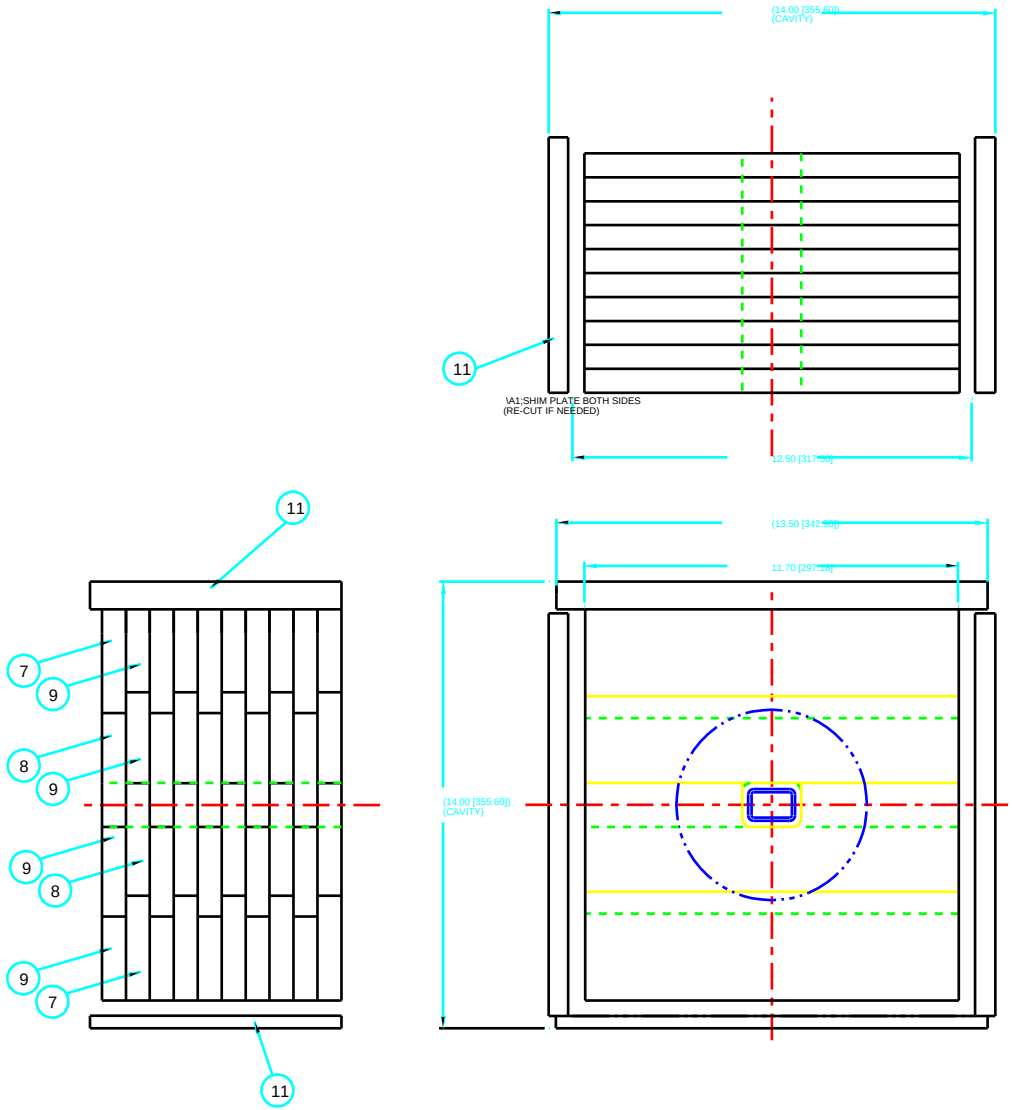


NOTE:

1- LEAD LINED PANELS SHALL BE CONSTRUCTED FROM SINGLE UNPIERCED SHEET. FREE OF OXIDE INCLUSIONS, FISSURES, VOIDS AND ALL OTHER DETRIMENTAL DEFECTS. MATERIAL SHALL BE LEAD GRADE "C" TO COMPLY WITH FEDERAL SPECIFICATION -QQL201. HUTCH SHALL MEET ALL APPLICABLE FEDERAL, STATE AND LOCAL RADIATION GUIDE LINES: NBS HANDBOOK 111 AND 114, ANS N43.2 AND DOE ORDER 5480.11

2- ALL DIMENSIONS SHOWN IN [ ] ARE MILLIMETERS AND FOR REFERENCE USE ONLY.

NOTE:
SHHET 3 OF 3 FOR LEAD CONSTRUCTION ONLY

| ITEM | DRAWING NUMBER | NOMENCLATURE OR DESCRIPTION | MATERIAL / SPEC | QTY |
|---|---|---|---|---|
| 19 | | | | |
| 18 | | | | |
| 16 | | | | |
| 15 | | | | |
| 14 | | | | |
| 13 | | | | |
| 12 | | | | |
| 11 | K1-440611-00 | K1-44 FOE WALL COLL. LEAD TOP & SHIMPLATE | | AS NEEDED |
| 9 | K1-440609-00 | K1-44 FOE WALL COLL. LEAD UPPER MID. PLATE | | 20 |
| 8 | K1-440608-00 | K1-44 FOE WALL COLL. LEAD LOWER MID. PLATE | | 10 |
| 7 | K1-440607-00 | K1-44 FOE WALL COLL. LEAD PLATE | | 10 |

PARTS LIST

UNLESS OTHERWISE SPECIFIED TOLERANCE ALL DIMENSIONS ARE IN INCHES
DECIMALS: .X ± .1 [2.5] .XX ± .01 [0.25] .XXX ± .005 [0.13]
FRACTIONS: ± .25"
SURFACE FINISH: 125
DO NOT SCALE DRAWING
DIMENSIONS & TOLERANCES PER ASME Y14.5M-1994
MATERIAL & TECHNOLOGY PER ASTM & ASME
IN THE SCALE DRAWING

K1440600-00-03

| | | | |
|---|---|---|---|
| DRAWN BY corcuera | DATE 12/18/98 | DESIGN REVIEW BY D. SHU | DATE 3/5/99 |
| REVIEWED BY J. CHANG | DATE 2/19/99 | PI LEADER T. KUZAY | DATE 3/5/99 |
| REVIEWED A. CORCUERA | DATE 12/18/98 | PROJECT ENG | DATE |
| MECHANICAL ENGINEER J. CHANG | DATE 2/19/99 | MANAGER/LEADER | DATE |

MATERIAL

THIS DRAWING IS THE PROPERTY OF ARGONNE NATIONAL LABORATORY

TITLE ADVANCED PHOTON SOURCE
K1-44
32 ID WALL COLLIMATOR
FOE LEAD ASSEMBLY

SCALE 1=2 SHEET 3 3 SIZE D DRAWING NUMBER K1-440600-00-03

| REV | CHANGE DESCRIPTION | BY | CHKD | DATE |
|---|---|---|---|---|
| | REVISIONS | | | |